# OPERATION MANUAL

# TNV series

YANMAR

# OPERATION MANUAL

## INDUSTRIAL ENGINES

TNV

2TNV70
3TNV70
3TNV76
3TNV82A
3TNV82A-B
3TNV84
3TNV88
3TNV88-B
3TNV88-U
3TNV84T
3TNV84T-Z
4TNV84
4TNV88
4TNV88-B
4TNV88-U
4TNV84T
4TNV84T-Z
4TNV94L
4TNV98
4TNV98-Z
4TNV98-E
4TNV98T
4TNV98T-Z
4TNV106
4TNV106T

## California Proposition 65 Warning

Diesel engine exhaust and some of its constituents are known to the state of California to cause cancer, birth defects, and other reproductive harm.

## California Proposition 65 Warning

Battery posts, terminals, and related accessories contain lead and lead compounds, chemicals known to the state of California to cause cancer and reproductive harm.
Wash hands after handling.

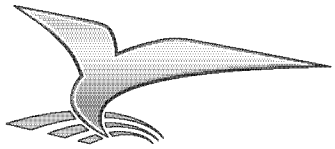

# TNV series

## OPERATION MANUAL

YANMAR®

2TNV70 • 3TNV70 • 3TNV76
3TNV82A • 3TNV82A-B • 3TNV84
3TNV88 • 3TNV88-B • 3TNV88-U
4TNV84 • 3TNV84T • 3TNV84T-Z
4TNV88 • 4TNV88-B • 4TNV88-U
4TNV84T • 4TNV84T-Z • 4TNV94L
4TNV98 • 4TNV98-Z • 4TNV98-E
4TNV98T • 4TNV98T-Z
4TNV106 • 4TNV106T

P/N: 0ATNV-U00101

INDUSTRIAL ENGINES

**Disclaimers:**

All information, illustrations and specifications in this manual are based on the latest information available at the time of publishing. The illustrations used in this manual are intended as representative reference views only. Moreover, because of our continuous product improvement policy, we may modify information, illustrations and / or specifications to explain and / or exemplify a product, service or maintenance improvement. We reserve the right to make any change at any time without notice. Yanmar and YANMAR are registered trademarks of Yanmar Co., Ltd. in Japan, the United States and / or other countries.

**All Rights Reserved:**

No part of this publication may be reproduced or used in any form by any means - graphic, electronic, or mechanical, including photocopying, recording, taping, or information storage and retrieval systems - without the written permission of Yanmar Co., Ltd.

© 2005 Yanmar Co. Ltd.

0206

# YANMAR WARRANTIES

## YANMAR LIMITED WARRANTY

### What is Covered by this Warranty?

Yanmar warrants to the original retail purchaser that a new Yanmar TNV Series Industrial Engine will be free from defects in material and / or workmanship for the duration of the warranty period.

Note: Yanmar engines may be equipped with external components including, but not limited to: wiring harnesses, electrical devices, control panels, radiators, air filters, fuel filters, and / or exhaust systems that are supplied and / or installed by manufacturers other than Yanmar. For warranty information on such external components, please contact the machine or component manufacturer directly or see your authorized Yanmar dealer or distributor.

THIS WARRANTY IS PROVIDED IN LIEU OF ALL OTHER WARRANTIES, EXPRESS OR IMPLIED. YANMAR SPECIFICALLY DISCLAIMS ANY IMPLIED WARRANTIES OF MERCHANTABILITY OR FITNESS FOR A PARTICULAR PURPOSE, except where such disclaimer is prohibited by law. IF SUCH DISCLAIMER IS PROHIBITED BY LAW, THEN IMPLIED WARRANTIES SHALL BE LIMITED IN DURATION TO THE LIFE OF THE EXPRESS WARRANTY.

### How Long is the Warranty Period?

The Yanmar standard limited warranty period runs for a period of **twenty-four (24) months or two-thousand (2000) engine operation hours**, whichever occurs first. An extended limited warranty of thirty-six (36) months or three thousand (3000) engine operating hours, whichever occurs first, is provided for these specific parts only: the cylinder block, cylinder head, crankshaft forging, connecting rods, flywheel, flywheel housing, camshaft, timing gear, and gear case. The Warranty Period for both the standard limited warranty and the extended limited warranty (by duration or operation hours) begins on the date of delivery to the original retail purchaser and is valid only until the applicable warranted duration has passed or the operation hours are exceeded, whichever comes first.

*Yanmar Limited Warranty - Continued*

## What the Engine Owner Must Do:

If you believe your Yanmar engine has experienced a failure due to a defect in material and / or workmanship, you must contact an authorized Yanmar industrial engine dealer or distributor within thirty (30) days of discovering the failure. You must provide proof of ownership of the engine, proof of the date of the engine purchase and delivery, and documentation of the engine operation hours. Acceptable forms of proof of delivery date include, but are not limited to: the original warranty registration or sales receipts or other documents maintained in the ordinary course of business by Yanmar dealers and / or distributors, indicating the date of delivery of the Yanmar product to the original retail purchaser. This information is necessary to establish whether the Yanmar product is still within the warranty period. Thus, Yanmar strongly recommends you register your engine as soon as possible after purchase in order to facilitate any future warranty matters.

You are responsible for the transportation of the engine to and from the repair location as designated by Yanmar.

## To Locate an Authorized Yanmar Industrial Engine Dealer or Distributor:

You can locate your nearest authorized Yanmar industrial engine dealer or distributor by visiting the Yanmar Corp., LTD. website at:

http://www.yanmar.co.jp (The Japanese language page will be displayed.) For English language “click” on “English Page.”)

- “Click” on “Network” in the website heading to view the “Yanmar Worldwide Network.”
- Choose and “Click” on the desired product group.
- “Click” on the Icon closest to your region.
- “Click” on the desired country or Associate company to locate your nearest authorized Yanmar industrial engine dealer or distributor.

You may also contact Yanmar by clicking on “Inquiry” in the website heading and typing in your question or comment.

## What Yanmar Will Do:

Yanmar warrants to the original retail purchaser of a new Yanmar engine that Yanmar will make such repairs and / or replacements at Yanmar’s option, of any part(s) of the Yanmar product covered by this Warranty found to be defective in material and / or workmanship. Such repairs and / or replacements will be made at a location designated by Yanmar at no cost to the purchaser for parts or labor.

*Yanmar Limited Warranty - Continued*

## What is Not Covered by this Warranty?

This Warranty does not cover parts affected by or damaged by any reason other than defective materials or workmanship, including, but not limited to, accident, misuse, abuse, “Acts of God,” neglect, improper installation, improper maintenance, improper storage, the use of unsuitable attachments or parts, the use of contaminated fuels, the use of fuels, oils, lubricants, or fluids other than those recommended in your Yanmar Operation Manual, unauthorized alterations or modifications, ordinary wear and tear, and rust or corrosion. This Warranty does not cover the cost of parts and / or labor required to perform normal / scheduled maintenance on your Yanmar engine. This Warranty does not cover consumable parts such as, but not limited to, filters, belts, hoses, fuel injector nozzles, lubricants and cleaning fluids. This Warranty does not cover the cost of shipping the product to or from the Warranty repair facility.

## Warranty Limitations:

**The foregoing is Yanmar’s only obligation to you and your exclusive remedy for breach of warranty.** Failure to follow the requirements for submitting a claim under this Warranty may result in a waiver of all claims for damages and other relief. **In no event shall Yanmar or any authorized industrial engine dealer or distributor be liable for incidental, special or consequential damages.** Such consequential damages may include, but not be limited to, loss of revenue, loan payments, cost of rental of substitute equipment, insurance coverage, storage, lodging, transportation, fuel, mileage, and telephone costs. The limitations in this Warranty apply regardless of whether your claims are based on breach of contract, tort (including negligence and strict liability) or any other theory. Any action arising hereunder must be brought within one (1) year after the cause of action accrues or it shall be barred. Some states and countries do not allow certain limitations on warranties or for breach of warranties. **This Warranty gives you specific legal rights, and you may also have other rights which vary from state to state and country to country.** Limitations set forth in this paragraph shall not apply to the extent that they are prohibited by law.

## Warranty Modifications:

Except as modified in writing and signed by the parties, this Warranty is and shall remain the complete and exclusive agreement between the parties with respect to warranties, superseding all prior agreements, written and oral, and all other communications between the parties relating to warranties. **No person or entity is authorized to give any other warranty or to assume any other obligation on behalf of Yanmar, either orally or in writing.**

## Questions:

If you have any questions or concerns regarding this Warranty, please call or write to the nearest authorized Yanmar industrial engine dealer or distributor or other authorized facility.

*Yanmar Limited Warranty - Continued*

## Retail Purchaser Registration

**It is very important for the original retail purchaser to register the Yanmar product. Registration enables Yanmar to provide the best support for your Yanmar product.**

At the time of purchase, Yanmar highly recommends registering the retail purchaser's information through website http://www.yanmar.co.jp as soon as possible.
*If it is not possible to access the website, please contact the nearest authorized Yanmar industrial engine dealer or distributor.*

# EMISSION SYSTEM WARRANTY

# YANMAR CO., LTD. LIMITED EMISSION CONTROL SYSTEM WARRANTY - USA ONLY

## Your Warranty Rights and Obligations:

### California

The California Air Resources Board (CARB), the Environmental Protection Agency (EPA) and Yanmar Co., Ltd. hereafter referred to as Yanmar, are pleased to explain the **emission control system warranty** on your industrial compression-ignition engine. In California, model year 2000 or later off-road compression-ignition engines must be designed, built and equipped to meet the State's stringent anti-smog standards. In all states, 1998 and later non-road compression-ignition engines must be designed, built and equipped to meet the United States EPA emissions standards. Yanmar warrants the emission control system on your engine for the periods of time listed below provided there has been no abuse, neglect or improper maintenance of your engine.

Your emission control system may include parts such as the fuel injection system, the air induction system, the electronic control system and the EGR (Exhaust Gas Recirculation) system. Also included may be hoses, belts, connectors and other emission-related assemblies.

Where a warrantable condition exists, Yanmar will repair your non-road compression-ignition engine at no charge to you including diagnosis, parts and labor.

## Manufacturer's Warranty Period:

The model year 1998 or later certified and labeled non-road compression-ignition engines are warranted for the periods listed below. If any emission-related part on your engine is found to be defective during the applicable warranty period, the part will be replaced by Yanmar.

| Engine Type | Warranty Period by Number of Years or Hours of Operation |
|---|---|
| Constant speed engines rated at or above 50 hp SAE (37 kW) | The warranty period is five (5) years or 3,000 hours of use, whichever occurs first. In the absence of a device to measure the hours of use, the engine has a warranty period of five (5) years. |
| Constant speed engines rated under 50 hp SAE (37 kW) with rated speeds greater than or equal to 3,000 rpm | The warranty period is two (2) years or 3,000 hours of use, whichever occurs first. In the absence of a device to measure the hours of use, the engine has a warranty period of two (2) years. |
| Engines rated at or above 26 hp SAE (19 kW) | The warranty period is five (5) years or 3,000 hours of use, whichever occurs first. In the absence of a device to measure the hours of use, the engine has a warranty period of five (5) years. |
| Engines rated under 26 hp SAE (19 kW) | The warranty period is two (2) years or 3,000 hours of use, whichever occurs first. In the absence of a device to measure the hours of use, the engine has a warranty period of two (2) years. |

***Limited Emission Control System Warranty - USA Only - Continued***

## Warranty Coverage:

This warranty is transferable to each subsequent purchaser for the duration of the warranty period. Repair or replacement of any warranted part will be performed at an authorized Yanmar industrial engine dealer or distributor.

Warranted parts not scheduled for replacement as required maintenance in the Operation Manual shall be warranted for the warranty period. Warranted parts scheduled for replacement as required maintenance in the operation manual are warranted for the period of time prior to the first scheduled replacement. Any part repaired or replaced under warranty shall be warranted for the remaining warranty period.

During the warranty period, Yanmar is liable for damages to other engine components caused by the failure of any warranted part during the warranty period.

Any replacement part which is functionally identical to the original equipment part in all respects may be used in the maintenance or repair of your engine, and shall not reduce Yanmar's warranty obligations. Add-on or modified parts that are not exempted may not be used. The use of any non-exempted add-on or modified parts shall be grounds for disallowing a warranty.

## Warranted Parts:

This warranty covers engine components that are a part of the emission control system of the engine as delivered by Yanmar to the original retail purchaser. Such components may include the following:

- Fuel Injection System
- Electronic Control System
- Cold Start Enrichment System
- Intake Manifold
- Turbocharger Systems
- Exhaust Manifold
- EGR System
- Positive Crankcase Ventilation System
- Hoses, belts, connectors and assemblies associated with emission control systems

Since emissions-related parts may vary slightly between models, certain models may not contain all of these parts and other models may contain the functional equivalents.

***Limited Emission Control System Warranty - USA Only - Continued***

## Exclusions:

Failures other than those arising from defects in material and / or workmanship are not covered by this warranty. The warranty does not extend to the following: malfunctions caused by abuse, misuse, improper adjustment, modification, alteration, tampering, disconnection, improper or inadequate maintenance or use of non-recommended fuels and lubricating oils; accident-caused damage, and replacement of expendable items made in connection with scheduled maintenance. Yanmar disclaims any responsibility for incidental or consequential damages such as loss of time, inconvenience, loss of use of equipment / engine or commercial loss.

## Owner's Warranty Responsibilities:

**As the engine owner, you are responsible for the performance of the required maintenance listed in your owner's manual.** Yanmar recommends that you retain all documentation, including receipts, covering maintenance on your non-road compression-ignition engine, but Yanmar cannot deny warranty solely for the lack of receipts, or for your failure to ensure the performance of all scheduled maintenance.

Yanmar may deny your warranty coverage of your non-road compression-ignition engine if a part has failed due to abuse, neglect, improper maintenance or unapproved modifications.

Your engine is designed to operate on diesel fuel only. Use of any other fuel may result in your engine no longer operating in compliance with applicable emissions requirements.

You are responsible for initiating the warranty process. You must present your engine to a Yanmar dealer as soon as a problem exists. The warranty repairs should be completed by the dealer as expeditiously as possible. If you have any questions regarding your warranty rights and responsibilities, or would like information on the nearest Yanmar dealer or authorized service center, you should contact Yanmar America Corporation at 1-800-872-2867.

This Page Intentionally Left Blank

# INTRODUCTION

Welcome to the world of Yanmar Engines! Yanmar has been the leader in industrial diesel engines for over 90 years. We developed the world's first practical small-sized diesel engine in 1933. Our engineers are continuously developing new technology to keep Yanmar on the leading-edge of the industry. The TNV engine is only one example of the new technology we have developed. We are committed to maintaining our environment, and are proud of our history of innovation, quality and respect for operator safety.

To help you enjoy your Yanmar TNV engine for many years to come, please follow these recommendations:

- Read and understand this *Operation Manual* before you operate the machine to ensure that you follow safe operating practices and maintenance procedures.
- Keep this *Operation Manual* in a convenient place for easy access.
- If this *Operation Manual* is lost or damaged, order a new one from your authorized Yanmar industrial engine dealer or distributor.
- Make sure this manual is transferred to subsequent owners. This manual should be considered a permanent part of the engine and remain with it.
- Constant efforts are made to improve the quality and performance of Yanmar products, so some details included in this *Operation Manual* may differ slightly from your engine. If you have any questions about these differences, please contact your authorized Yanmar industrial engine dealer or distributor.
- The specifications and components (instrument panel, fuel tank, etc.) described in this manual may differ from ones installed on your machine. Please refer to the manual provided by the manufacturer of these components.

# RECORD OF OWNERSHIP

Take a few moments to record the information you need when you contact Yanmar for service, parts or literature.

**Engine Model:**

**Engine Serial No.:**

**Date Purchased:**

**Dealer:**

**Dealer Phone:**

# SYMBOL EXPLANATION

The following symbols are used throughout this manual to identify specific engine model information

This symbol indicates information pertaining to the following indirect injection engines:

- 2TNV70*
- 3TNV70*
- 3TNV76*

An asterisk (*) indicates the engines conform to the next engine emission regulations (EPA 2008 rules).

This symbol indicates information pertaining to the following direct injection engines:

- 3TNV82A
- 3TNV82A-B*
- 3TNV84
- 3TNV84T-B*
- 3TNV84T
- 3TNV88-B*
- 3TNV88
- 3TNV88-U*
- 4TNV84
- 4TNV84T-Z**
- 4TNV84T
- 4TNV88-B*
- 4TNV88
- 4TNV88-U*
- 4TNV94L
- 4TNV98-Z**
- 4TNV98
- 4TNV98-E**
- 4TNV98T
- 4TNV98T-Z**
- 4TNV106
- 4TNV106T

An asterisk (*) indicates the engines conform to the next engine emission regulations (EPA 2008 rules).

A double asterisk (**) indicates the engines are electronically controlled and conform to the next engine emission regulations (EPA 2008 rules).

# TABLE OF CONTENTS


**Yanmar Warranties** ..... iii

Yanmar Limited Warranty ..... iii

What is Covered by this Warranty? ..... iii

How Long is the Warranty Period? ..... iii

What the Engine Owner Must Do: ..... iv

To Locate an Authorized Yanmar Industrial Engine Dealer or Distributor: ..... iv

You may also contact Yanmar by clicking on “Inquiry” in the website heading and typing in your question or comment..... iv

What Yanmar Will Do: ..... iv

What is Not Covered by this Warranty? ..... v

Warranty Limitations: ..... v

Warranty Modifications: ..... v

Questions: ..... v

Retail Purchaser Registration ..... vi

Emission System Warranty ..... vii

Yanmar Co., Ltd. Limited Emission Control System Warranty - USA Only ..... vii

Your Warranty Rights and Obligations: ..... vii

Manufacturer’s Warranty Period: ..... vii

Warranty Coverage: ..... viii

Warranted Parts: ..... viii

Exclusions: ..... ix

Owner’s Warranty Responsibilities: ..... ix

**Introduction** ..... xi

Record of Ownership ..... xii

Symbol Explanation ..... xii

**Table of Contents** ..... xiii

# TABLE OF CONTENTS


**Safety** ..... 1
- Safety Statements ..... 1
- Safety Precautions ..... 2
  - Before You Operate ..... 2
  - During Operation and Maintenance ..... 2

**Product Overview** ..... 15
- Yanmar TNV Engine Features and Applications ..... 15
- Component Identification ..... 16
- Location of Labels ..... 19
- EPA / ARB Emission Control Regulations - USA Only ..... 20
- Emission Control Labels ..... 20
  - EPA / ARB Labels ..... 20
- The 97/68/EC Directive Certified Engines ..... 21
- Engine Family ..... 21
- Function of Major Engine Components ..... 22
- Function of Cooling System Components ..... 24
- ELECTRONIC CONTROL SYSTEM ..... 25
- MAIN ELECTRONIC CONTROL COMPONENTS AND FEATURES 28
- Gauges and Indicators ..... 30
  - Gauges ..... 30
  - Indicators ..... 31
- GAUGES AND INDICATORS OF ELECTRONIC CONTROL SYSTEM ..... 32
  - Gauges ..... 32
  - Indicators ..... 32
- Controls ..... 33
  - Key Switch ..... 33
  - Glow Plugs ..... 34
  - Inlet Air Heater ..... 34
  - Governor Lever ..... 35
  - Speed Control of Electronically Controlled Engines ..... 35
  - Engine Stop Solenoid ..... 36
  - ELECTRONIC ENGINE SPEED CONTROL ..... 36

**Before You Operate** ..... 39
- Diesel Fuel ..... 44
  - Diesel Fuel Specifications ..... 44
  - Filling the Fuel Tank ..... 46
  - Priming the Fuel System ..... 48

Engine Oil ..... 49
Engine Oil Specifications ..... 49
Engine Oil Viscosity ..... 50
Checking Engine Oil ..... 50
Adding Engine Oil ..... 50
Engine Oil Capacity (Typical) ..... 51
Engine Coolant ..... 52
Engine Coolant Specifications ..... 53
Filling Radiator With Engine Coolant ..... 53
Daily Check of the Cooling System ..... 54
Engine Coolant Capacity (Typical) ..... 54
Daily Checks ..... 55
Visual Checks ..... 56
Check Diesel Fuel, Engine Oil and Engine Coolant Levels ..... 56
Check Engine Speed Control ..... 56
Check Operator's Console ..... 56
Check Indicators ..... 56

**Engine Operation** ..... 59
Starting Engine ..... 65
Cold Start Device ..... 67
Checking the Engine During Operation ..... 67
Adjust Engine Speed ..... 69
Shutting Down the Engine ..... 69
**Periodic Maintenance** ..... 71
Precautions ..... 83
The Importance of Periodic Maintenance ..... 83
Performing Periodic Maintenance ..... 83
The Importance of Daily Checks ..... 83
Keep a Log of Engine Hours and Daily Checks ..... 83
Yanmar Replacement Parts ..... 83
Tools Required ..... 83
Ask Your Authorized Yanmar Industrial Engine Dealer or Distributor For Help ..... 83
Required EPA / ARB Maintenance USA Only ..... 84
EPA / ARB Installation Requirements USA Only ..... 84
Tightening Fasteners ..... 84
Standard Torque Chart ..... 84
Periodic Maintenance Schedule ..... 85
Periodic Maintenance Chart ..... 86

Periodic Maintenance Procedures ..... 88
After Initial 50 Hours of Operation ..... 88
Every 50 Hours of Operation ..... 94
Every 250 Hours of Operation ..... 97
Every 500 Hours of Operation ..... 102
Every 1000 Hours of Operation ..... 108
Every 1500 Hours of Operation ..... 110
Every 2000 Hours of Operation ..... 112

**Troubleshooting** ..... 113
Troubleshooting Chart ..... 113
TROUBLESHOOTING OF ELECTRONIC CONTROL SYSTEM ..... 116
Fault Detection Capability ..... 116
Diagnosis Tool ..... 119
Troubleshooting Information ..... 120
List of Possible Faults of Electronically Controlled Engines ..... 121

**Long-Term Storage** ..... 125
Before You Place the Engine In Long-Term Storage ..... 125
Returning the Engine to Service ..... 126

**Specifications** ..... 127
General ..... 127
Description of Model Number ..... 127
Engine Speed Specifications ..... 128
Engine General Specifications ..... 128

Principal Engine Specifications ..... 129
2TNV70 (~ EPA Tier4) .....129
3TNV70 (~ EPA Tier4) .....130
3TNV76 (~ EPA Tier4) .....131
3TNV82A (~ EPA Tier2) .....132
3TNV84 (~ EPA Tier2) .....133
3TNV84T (~ EPA Tier2) .....134
3TNV88 (~ EPA Tier2) .....135
4TNV84 (~ EPA Tier2) .....136
4TNV84T (~ EPA Tier2) .....137
4TNV88 (~ EPA Tier2) .....138
4TNV94L (~ EPA Tier2) .....139
4TNV98 (~ EPA Tier2) .....140
4TNV98T (~ EPA Tier2) .....141
4TNV106 (~ EPA Tier2) .....142
4TNV106T (~ EPA Tier2) .....143
3TNV82A-B (complies with EPA Interim Tier4) .....144
3TNV84T-B (complies with EPA Interim Tier4) .....145
3TNV88-U (complies with EPA Interim Tier4) .....146
3TNV88-B (complies with EPA Interim Tier4) .....147
4TNV84T-Z (complies with EPA Interim Tier4) .....148
4TNV88-U (complies with EPA Interim Tier4) .....149
4TNV88-B (complies with EPA Interim Tier4) .....150
4TNV98-E (complies with EPA Interim Tier4) .....151
4TNV98-Z (complies with EPA Interim Tier4).....152
4TNV98T-Z (complies with EPA Interim Tier4) .....153

This Page Intentionally Left Blank

# SAFETY

## SAFETY STATEMENTS

Yanmar is concerned for your safety and your machine's condition. Safety statements are one of the primary ways to call your attention to the potential hazards associated with Yanmar TNV engine operation. Follow the precautions listed throughout the manual before operation, during operation and during periodic maintenance procedures for your safety, the safety of others and to protect the performance of your engine. Keep the labels from becoming dirty or torn and replace them if they are lost or damaged. Also, if you need to replace a part that has a label attached to it, make sure you order the new part and label at the same time.

This safety alert symbol appears with most safety statements. It means attention, become alert, your safety is involved! Please read and abide by the message that follows the safety alert symbol.

**⚠ DANGER**

**Danger (the word "DANGER" is in white letters with a red rectangle behind it) - indicates an imminently hazardous situation which, if not avoided, will result in death or serious injury. Danger is limited to the most extreme situations.**

0000001en

**⚠ WARNING**

**Warning (the word "WARNING" is in black letters with an orange rectangle behind it) – indicates a potentially hazardous situation which, if not avoided, could result in death or serious injury.**

0000001en

**⚠ CAUTION**

**Caution (the word "CAUTION" is in black letters with a yellow rectangle behind it) – indicates a potentially hazardous situation which, if not avoided, may result in minor or moderate injury.**

0000001en

**CAUTION**

**Caution without the safety alert symbol indicates a potentially hazardous situation that can cause damage to the machine, personal property and / or the environment or cause the machine to operate improperly.**

0000001en

# SAFETY PRECAUTIONS

## Before You Operate

**CAUTION**

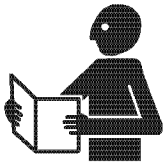

NEVER permit anyone to operate the engine or driven machine without proper training.

- Read and understand this Operation Manual before you operate or service the machine to ensure that you follow safe operating practices and maintenance procedures.
- Machine safety signs and labels are additional reminders for safe operating and maintenance techniques.
- See your authorized Yanmar industrial engine dealer or distributor for additional training.

0000002en

## During Operation and Maintenance

**⚠ DANGER**

**SCALD HAZARD!**

- NEVER remove the radiator cap if the engine is hot. Steam and hot engine coolant will spurt out and seriously burn you. Allow the engine to cool down before you attempt to remove the radiator cap.
- Tighten the radiator cap securely after you check the radiator. Steam can spurt out during engine operation if the cap is loose.
- ALWAYS check the level of the engine coolant by observing the reserve tank.
- Failure to comply will result in death or serious injury.

0000002en

**⚠ DANGER**

**EXPLOSION HAZARD!**

- Keep the area around the battery well-ventilated. While the engine is running or the battery is charging, hydrogen gas is produced which can be easily ignited.
- Keep sparks, open flame and any other form of ignition away while the engine is running or battery is charging.
- Failure to comply will result in death or serious injury.

0000003en

**⚠ DANGER**

**FIRE AND EXPLOSION HAZARD!**

- Diesel fuel is flammable and explosive under certain conditions.
- When you remove any fuel system component to perform maintenance (such as changing the fuel filter) place an approved container under the opening to catch the fuel.
- NEVER use a shop rag to catch the fuel. Vapors from the rag are flammable and explosive.
- Wipe up any spills immediately.
- Wear eye protection. The fuel system is under pressure and fuel could spray out when you remove any fuel system component.
- Failure to comply will result in death or serious injury.

0000009en

**⚠ DANGER**

**FIRE AND EXPLOSION HAZARD!**

- Only use the key switch to start the engine.
- NEVER jump-start the engine. Sparks caused by shorting the battery to the starter terminals may cause a fire or explosion.
- Failure to comply will result in death or serious injury.

0000004en

**⚠ DANGER**

**FIRE AND EXPLOSION HAZARD!**

- Diesel fuel is flammable and explosive under certain conditions.
- If the unit has an electric fuel pump, when you prime the fuel system, turn the key switch to the ON position for 10 to 15 seconds to allow the electric fuel pump to prime the system.
- If the unit has a mechanical fuel pump, when you prime the fuel system, operate the fuel priming lever of the mechanical fuel pump several times until the fuel filter cup is filled with fuel.
- Failure to comply will result in death or serious injury.

0000010en

**⚠ DANGER**

**CRUSH HAZARD!**

- When you need to transport an engine for repair, have a helper assist you to attach it to a hoist and load it on a truck.
- NEVER stand under a hoisted engine. If the hoist mechanism fails, the engine will fall on you, causing death or serious injury.
- Failure to comply will result in death or serious injury.

0000008en

**⚠ DANGER**

**FIRE AND EXPLOSION HAZARD!**

- Diesel fuel is extremely flammable and explosive under certain conditions.
- If the unit has an electric fuel pump, when you prime the fuel system, turn the key switch to the ON position for 10 to 15 seconds to allow the electric fuel pump to prime the system.
- If the unit has a mechanical fuel pump, when you prime the fuel system, operate the fuel priming lever of the mechanical fuel pump several times until the fuel filter cup is filled with fuel.
- NEVER open the air vent valve while the fuel system is being primed. The fuel filter has an internal air bleed port.
- Failure to comply will result in death or serious injury.

0000013en

**⚠ DANGER**

**FIRE AND EXPLOSION HAZARD!**

- Diesel fuel is flammable and explosive under certain conditions.
- NEVER use diesel fuel as a cleaning agent.
- Failure to comply will result in death or serious injury.

0000012en

**⚠ DANGER**

**FIRE AND EXPLOSION HAZARD!**

- Diesel fuel is flammable and explosive under certain conditions.
- NEVER remove the fuel cap with the engine running.
- Failure to comply will result in death or serious injury.

0000011en

**⚠ DANGER**

**FIRE AND EXPLOSION HAZARD!**

- Diesel fuel is flammable and explosive under certain conditions.
- Only fill the fuel tank with diesel fuel. Filling the fuel tank with gasoline may result in a fire and will damage the engine.
- NEVER refuel with the engine running.
- Wipe up all spills immediately.
- Keep sparks, open flames or any other form of ignition (match, cigarette, static electric source) well away when refueling.
- NEVER overfill the fuel tank.
- Fill the fuel tank. Store any containers containing fuel in a well-ventilated area, away from any combustibles or sources of ignition.
- Failure to comply will result in death or serious injury.

0000005en

**⚠ DANGER**

**FIRE AND EXPLOSION HAZARD!**

- Diesel fuel is flammable and explosive under certain conditions.
- Be sure to place the diesel fuel container on the ground when transferring the diesel fuel from the pump to the container. Hold the hose nozzle firmly against the side of the container while filling it. This prevents static electricity buildup which could cause sparks and ignite fuel vapors.
- NEVER place diesel fuel or other flammable material such as oil, hay or dried grass close to the engine during engine operation or shortly after shutdown.
- Failure to comply will result in death or serious injury.

0000014en

**⚠ DANGER**

**EXPLOSION HAZARD!**

- Never short out the battery terminals, including when checking the remaining battery charge. This will result in a spark and may cause an explosion or fire. Use a hydrometer to check the remaining battery charge.
- If the electrolyte is frozen, slowly warm the battery before you recharge it.
- Failure to comply will result in death or serious injury.

0000007en

**⚠ DANGER**

**FIRE AND EXPLOSION HAZARD!**

- Diesel fuel is flammable and explosive under certain conditions.
- Before you operate the engine, check for fuel leaks. Replace rubberized fuel hoses every two years or every 2000 hours of engine operation, whichever comes first, even if the engine has been out of service. Rubberized fuel lines tend to dry out and become brittle after two years or 2000 hours of engine operation, whichever comes first.
- Failure to comply will result in death or serious injury.

0000015en

**⚠ DANGER**

**FIRE AND EXPLOSION HAZARD!**

- Diesel fuel is flammable and explosive under certain conditions.
- When you prime the fuel system, operate the fuel priming lever of the mechanical fuel pump several times until the fuel filter cup is filled with fuel.
- NEVER open the air vent valve while the fuel system is being primed. The fuel filter has an internal air bleed port.
- Failure to comply will result in death or serious injury.

0000016en

**⚠ DANGER**

**FIRE AND EXPLOSION HAZARD!**

- Diesel fuel is flammable and explosive under certain conditions.
- If the unit has an electric fuel pump, when you prime the fuel system, turn the key switch to the ON position for 10 to 15 seconds to allow the electric fuel pump to prime the system.
- If the unit has a mechanical fuel pump, when you prime the fuel system, operate the fuel priming lever of the mechanical fuel pump several times until the fuel filter cup is filled with fuel.
- Failure to comply will result in death or serious injury.

0000010en

**⚠ WARNING**

**BURN HAZARD!**

- Batteries contain sulfuric acid. NEVER allow battery fluid to come in contact with clothing, skin or eyes. Severe burns could result. ALWAYS wear safety goggles and protective clothing when servicing the battery. If battery fluid contacts the eyes and / or skin, immediately flush the affected area with a large amount of clean water and obtain prompt medical treatment.
- Failure to comply could result in death or serious injury.

0000007en

**⚠ WARNING**

**SEVER HAZARD!**

- Keep hands and other body parts away from moving / rotating parts such as the cooling fan, flywheel or PTO shaft.
- Wear tight-fitting clothing and keep your hair short or tie it back while the engine is running.
- Remove all jewelry before you operate or service the machine.
- NEVER start the engine in gear. Sudden movement of the engine and / or machine could cause death or serious personal injury.
- NEVER operate the engine without the guards in place.
- Before you start the engine make sure that all bystanders are clear of the area.
- Keep children and pets away while the engine is operating.
- Check before starting the engine that any tools or shop rags used during maintenance have been removed from the area.
- Failure to comply could result in death or serious injury.

0000002en

**⚠ WARNING**

**EXHAUST HAZARD!**

- NEVER operate the engine in an enclosed area such as a garage, tunnel, underground room, manhole or ship's hold without proper ventilation.
- NEVER block windows, vents, or other means of ventilation if the engine is operating in an enclosed area. All internal combustion engines create carbon monoxide gas during operation. Accumulation of this gas within an enclosure could cause illness or even death.
- Make sure that all connections are tightened to specifications after repair is made to the exhaust system.
- Failure to comply could result in death or serious injury.

0000003en

**⚠ WARNING**

**ALCOHOL AND DRUG HAZARD!**

- NEVER operate the engine while you are under the influence of alcohol or drugs.
- NEVER operate the engine when you are feeling ill.
- Failure to comply could result in death or serious injury.

0000004en

**⚠ WARNING**

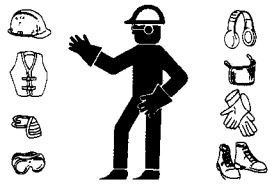

**EXPOSURE HAZARD!**

- Wear personal protective equipment such as gloves, work shoes, eye and hearing protection as required by the task at hand.
- NEVER wear jewelry, unbuttoned cuffs, ties or loose-fitting clothing when you are working near moving / rotating parts such as the cooling fan, flywheel or PTO shaft.
- ALWAYS tie back long hair when you are working near moving / rotating parts such as a cooling fan, flywheel, or PTO shaft.
- NEVER operate the engine while wearing a headset to listen to music or radio because it will be difficult to hear the alert signals.
- Failure to comply could result in death or serious injury.

0000005en

**⚠ WARNING**

**BURN HAZARD!**

- Wait until the engine cools before you drain the engine coolant. Hot engine coolant may splash and burn you.
- Failure to comply could result in death or serious injury.

0000016en

**⚠ WARNING**

**BURN HAZARD!**

- If you must drain the engine oil while it is still hot, stay clear of the hot engine oil to avoid being burned.
- ALWAYS wear eye protection.
- Failure to comply could result in death or serious injury.

0000011en

**⚠ WARNING**

**HIGH-PRESSURE HAZARD!**

- Avoid skin contact with the high-pressure diesel fuel spray caused by a fuel system leak such as a broken fuel injection line. High-pressure fuel can penetrate your skin and result in serious injury. If you are exposed to high-pressure fuel spray, obtain prompt medical treatment.
- NEVER check for a fuel leak with your hands. ALWAYS use a piece of wood or cardboard. Have your authorized Yanmar industrial engine dealer or distributor repair the damage.
- Failure to comply could result in death or serious injury.

0000008en

**⚠ WARNING**

**SHOCK HAZARD!**

- Turn off the battery switch (if equipped) or disconnect the negative battery cable before servicing the electrical system.
- Check the electrical harnesses for cracks, abrasions, and damaged or corroded connectors. ALWAYS keep the connectors and terminals clean.
- Failure to comply could result in death or serious injury.

0000009en

**⚠ WARNING**

**ENTANGLEMENT HAZARD!**

- Stop the engine before you begin to service it.
- NEVER leave the key in the key switch when you are servicing the engine. Someone may accidentally start the engine and not realize you are servicing it. This could result in a serious injury.
- If you must service the engine while it is operating, remove all jewelry, tie back long hair, and keep your hands, other body parts and clothing away from moving / rotating parts.
- Failure to comply could result in death or serious injury.

0000010en

**⚠ WARNING**

**SUDDEN MOVEMENT HAZARD!**

- Engaging the transmission or PTO at an elevated engine speed could result in unexpected movement of the equipment.
- Failure to comply could result in death or serious injury.

0000006en

**⚠ WARNING**

**BURN HAZARD!**

- Keep your hands and other body parts away from hot engine surfaces such as the muffler, exhaust pipe, turbocharger (if equipped) and engine block during operation and shortly after you shut the engine down. These surfaces are extremely hot while the engine is operating and could seriously burn you.
- Failure to comply could result in death or serious injury.

0000015en

**CAUTION**

NEVER attempt to adjust the low or high idle speed limit screw. This may impair the safety and performance of the machine and shorten its life. If adjustment is ever required, contact your authorized Yanmar industrial engine dealer or distributor.

0000045en

**⚠ CAUTION**

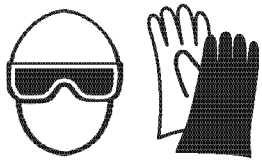

**COOLANT HAZARD!**

- Wear eye protection and rubber gloves when you handle long life or extended life engine coolant. If contact with the eyes or skin should occur, flush eyes and wash immediately with clean water.
- Failure to comply may result in minor or moderate injury.

0000005en

**⚠ CAUTION**

**FLYING OBJECT HAZARD!**

- ALWAYS wear eye protection when servicing the engine and when using compressed air or high-pressure water. Dust, flying debris, compressed air, pressurized water or steam may injure your eyes.
- Failure to comply may result in minor or moderate injury.

0000003en

**CAUTION**

If any problem is noted during the visual check, the necessary corrective action should be taken before you operate the engine.

0000021en

**CAUTION**

- Only use diesel fuels recommended by Yanmar for the best engine performance, to prevent engine damage and to comply with EPA / ARB warranty requirements.
- Only use clean diesel fuel.
- NEVER remove the primary strainer (if equipped) from the fuel tank filler port. If removed, dirt and debris could get into the fuel system causing it to clog.

0000004en

**CAUTION**

NEVER hold the key in the START position for longer than 15 seconds or the starter motor will overheat.

0000007en

**CAUTION**

Make sure the engine is installed on a level surface. If a continuously running engine is installed at an angle greater than (IDI = 25°, DI = 30°) in any direction or if an engine runs for short periods of time (less than three minutes) at an angle greater than (IDI = 30°, DI = 35°) in any direction, engine oil may enter the combustion chamber causing excessive engine speed and white exhaust smoke. This may cause serious engine damage.

0000010enTNV

**CAUTION**

NEVER attempt to adjust the low or high idle speed limit screw. This may impair the safety and performance of the machine and shorten its life. If the idle speed limit screws require adjustment, see your authorized Yanmar industrial engine dealer or distributor.

0000017en

**CAUTION**

Observe the following environmental operating conditions to maintain engine performance and avoid premature engine wear:

- Avoid operating in extremely dusty conditions.
- Avoid operating in the presence of chemical gases or fumes.
- Avoid operating in a corrosive atmosphere such as salt water spray.
- NEVER install the engine in a floodplain unless proper precautions are taken to avoid being subject to a flood.
- NEVER expose the engine to the rain.

0000003en

**CAUTION**

Observe the following environmental operating conditions to maintain engine performance and avoid premature engine wear:

- The standard range of ambient temperatures for the normal operation of Yanmar engines is from +5°F (-15°C) to +113°F (+45°C).
- If the ambient temperature exceeds +113°F (+45°C) the engine may overheat and cause the engine oil to break down.
- If the ambient temperature is below +5°F (-15°C) the engine will be hard to start and the engine oil may not flow easily.
- Contact your authorized Yanmar industrial engine dealer or distributor if the engine will be operated outside of this standard temperature range.

0000065en

**CAUTION**

The illustrations and descriptions of optional equipment in this manual, such as the operator's console, are for a typical engine installation. Refer to the documentation supplied by the optional equipment manufacturer for specific operation and maintenance instructions.

0000018en

**CAUTION**

If any indicator illuminates during engine operation, stop the engine immediately. Determine the cause and repair the problem before you continue to operate the engine.

0000029en

**CAUTION**

- Only use the engine oil specified. Other engine oils may affect warranty coverage, cause internal engine components to seize and / or shorten engine life.
- Prevent dirt and debris from contaminating the engine oil. Carefully clean the oil cap / dipstick and the surrounding area before you remove the cap.
- NEVER mix different types of engine oil. This may adversely affect the lubricating properties of the engine oil.
- NEVER overfill. Overfilling may result in white exhaust smoke, engine overspeed or internal damage.

0000005en

**CAUTION**

NEVER use an engine starting aid such as ether. Engine damage will result.

0000009en

**CAUTION**

- Only use the engine coolant specified. Other engine coolants may affect warranty coverage, cause an internal buildup of rust and scale and / or shorten engine life.
- Prevent dirt and debris from contaminating the engine coolant. Carefully clean the radiator cap and the surrounding area before you remove the cap.
- NEVER mix different types of engine coolants. This may adversely affect the properties of the engine coolant.

0000006en

**CAUTION**

- NEVER overfill the engine with engine oil.
- ALWAYS keep the oil level between the upper and lower lines on the oil cap / dipstick.

0000015en

**CAUTION**

For maximum engine life, Yanmar recommends that when shutting the engine down, you allow the engine to idle, without load, for five minutes. This will allow the engine components that operate at high temperatures, such as the turbocharger (if equipped) and exhaust system, to cool slightly before the engine itself is shut down.

0000008en

**CAUTION**

NEVER engage the starter motor while the engine is running. This may damage the starter motor pinion and / or ring gear.

0000012en

## CAUTION

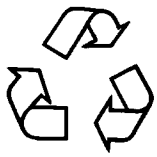

- ALWAYS be environmentally responsible.
- Follow the guidelines of the EPA or other governmental agencies for the proper disposal of hazardous materials such as engine oil, diesel fuel and engine coolant. Consult the local authorities or reclamation facility.
- NEVER dispose of hazardous materials irresponsibly by dumping them into a sewer, on the ground, or into ground water or waterways.
- Failure to follow these procedures may seriously harm the environment.

0000013en

## CAUTION

Establish a periodic maintenance plan according to the engine application and make sure you perform the required periodic maintenance at intervals indicated. Failure to follow these guidelines will impair the engine's safety and performance characteristics, shorten the engine's life and may affect the warranty coverage on your engine. *See Yanmar Limited Warranty in the Warranty Section of this manual.*

Consult your authorized Yanmar industrial engine dealer or distributor for assistance when checking items marked with a ●.

0000024enTNVIDI-DIOM

## ⚠ CAUTION

- When using a 120V system only, push the change-over switch to the right (120V).
- The main switch should always be kept in the ON position during operation.
- Before starting the engine, ALWAYS turn the switches on the working instruments (lighting apparatus, motor, etc.) to their OFF position. If the switches are not OFF, the sudden application of load when the engine is started could be very dangerous.

0000025en

## CAUTION

New Engine Break-in:

- On the initial engine start-up, allow the engine to idle for approximately 15 minutes while you check for proper engine oil pressure, diesel fuel leaks, engine oil leaks, coolant leaks, and for proper operation of the indicators and / or gauges.
- During the first hour of operation, vary the engine speed and the load on the engine. Short periods of maximum engine speed and load are desirable. Avoid prolonged operation at minimum or maximum engine speeds and loads for the next four to five hours.
- During the break-in period, carefully observe the engine oil pressure and engine temperature.
- During the break-in period, check the engine oil and coolant levels frequently.

0000011en

## CAUTION

Protect the air cleaner, turbocharger (if equipped) and electric components from damage when you use steam or high-pressure water to clean the engine.

0000014en

## CAUTION

NEVER use high-pressure water or compressed air at greater than 28 psi (193 kPa; 19 686 mmAq) or a wire brush to clean the radiator fins. Radiator fins damage easily.

0000016en

## CAUTION

The tightening torque in the Standard Torque Chart in the *Periodic Maintenance Section* of this manual should be applied only to the bolts with a "7" head. (JIS strength classification: 7T)

- Apply 60% torque to bolts that are not listed.
- Apply 80% torque when tightened to aluminum alloy.

0000023enTNVIDI-DIOM

## CAUTION

If any indicator fails to illuminate when the key switch is in the ON position, see your authorized Yanmar industrial engine dealer or distributor for service before operating the engine.

0000028en

## CAUTION

If no water drips when the fuel filter / water separator drain cock is opened, loosen the air vent screw on the top of the fuel filter / water separator by using a screwdriver to turn it counterclockwise 2-3 turns.

This may occur if the fuel filter / water separator is positioned higher than the fuel level in the fuel tank. After draining the fuel filter / water separator, be sure to tighten the air vent screw.

0000025enTNVIDI-DI

## CAUTION

- When the engine is operated in dusty conditions, clean the air cleaner element more frequently.
- NEVER operate the engine with the air cleaner element(s) removed. This may allow foreign material to enter the engine and damage it.

0000026en

## CAUTION

The maximum air intake restriction, in terms of differential pressure measurement, must not exceed 0.90 psi (6.23 kPa; 635 mmAq). Clean or replace the air cleaner element if the air intake restriction exceeds the above mentioned value.

0000046en

**CAUTION**

Make it a habit to perform daily checks. *See Daily Checks in the Before You Operate Section of this manual.*

Periodic maintenance prevents unexpected downtime, reduces the number of accidents due to poor machine performance and helps extend the life of the engine.

0000060enTNVIDI-DIOM

**CAUTION**

- NEVER attempt to modify the engine's design or safety features such as defeating the engine speed limit control or the diesel fuel injection quantity control.
- Modifications may impair the engine's safety and performance characteristics and shorten the engine's life. Any alterations to this engine may void its warranty. Be sure to use Yanmar genuine replacement parts.

0000079en

# PRODUCT OVERVIEW

## YANMAR TNV ENGINE FEATURES AND APPLICATIONS

Yanmar's series of TNV engines are environmentally friendly and are designed to:

- Lower the amount of exhaust gas emissions.
- Reduce engine noise and vibration.
- Be easy to start thanks to the specially designed fuel injection pump and combustion system.
- Be economical to run because diesel fuel and engine oil consumption are reduced.
- Be easy to operate due to the minimum amount of required maintenance and their compact design.
- Be durable and reliable due in part to the newly designed fuel injection valve and fuel injection pump.

Yanmar TNV engines are designed to supply power to a wide variety of driven machines including:

- Construction
- Agriculture
- Power Generation

We are sure that you will agree these features provide excellent value in an industrial diesel engine.

These engines are designed to deliver power to driven machines by means of a "direct coupled drive" or "belt drive." In direct coupled drive engine applications, the engine's flywheel housing or end plate is coupled directly to the driven machine. In belt drive engine applications, a belt drive is used to power the driven machine. If you have applications that require a belt drive and / or front power take-off (PTO), please contact your authorized Yanmar industrial engine dealer or distributor.

The engine is designed for a wide range of applications. Options, such as fuel tank, control panel, indicators, gauges and alarms, are available to customize the application.

Since designing the application and installing the engine require special knowledge and skill, always consult your authorized Yanmar industrial engine dealer or distributor for these services. They will help you:

- Select optional equipment. Optional equipment should be selected to match the work conditions and environment.
- Maximize engine performance with a minimum amount of downtime and safety related incidents by carefully matching the characteristics of the engine with the driven machine.
- Plan for safe fuel piping, exhaust piping, electrical wiring, ventilation and accurate engine installation.
- Design your applications so they meet requirements of the local authorities.

# COMPONENT IDENTIFICATION

## 2TNV70, 3TNV70, 3TNV76

**Figure 1** shows where major indirect injection engine components are located.

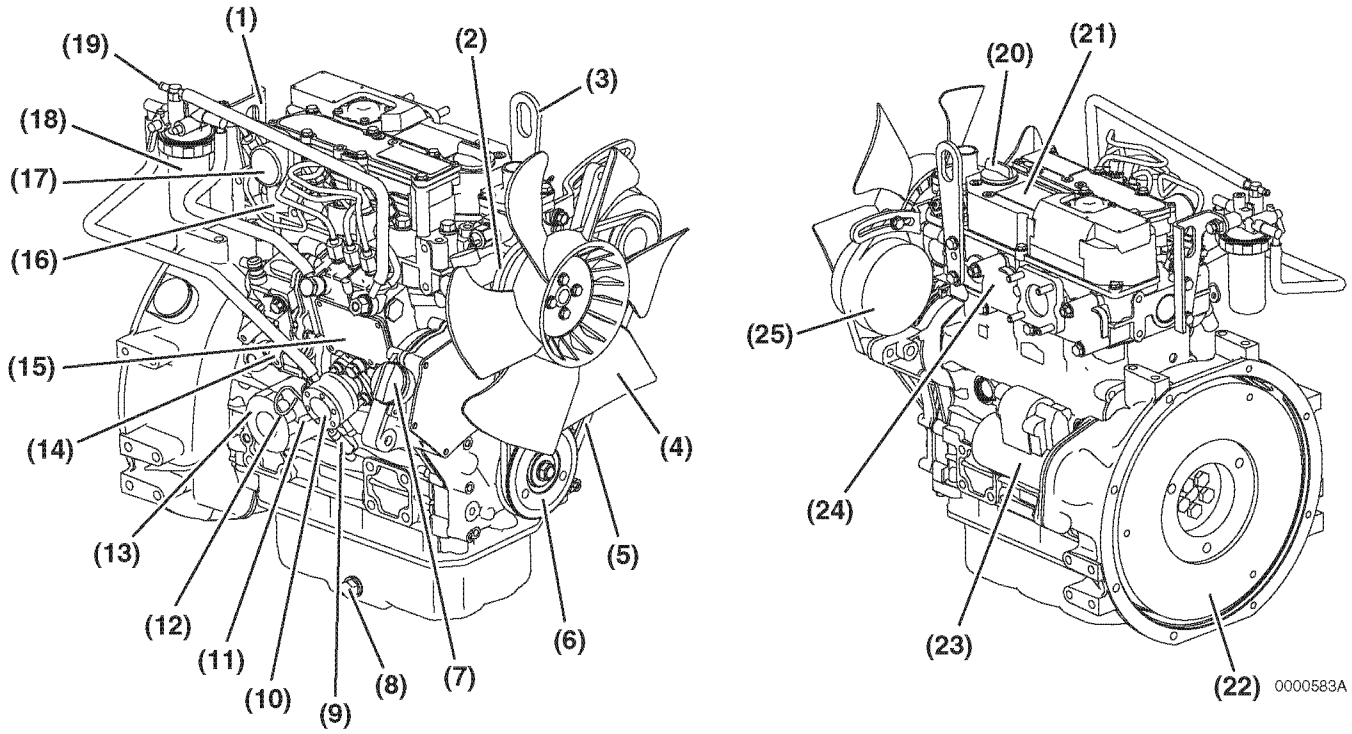


*Figure 1*

1 – Lifting Eye (Flywheel End)
2 – Engine Coolant Pump
3 – Lifting Eye (Engine Cooling Fan End)
4 – Engine Cooling Fan
5 – V-Belt
6 – Crankshaft V-Pulley
7 – Side Filler Port (Engine Oil)
8 – Drain Plug (Engine Oil)*
9 – Fuel Inlet
10 – Mechanical Fuel Pump
11 – Fuel Priming Lever
12 – Dipstick (Engine Oil)
13 – Engine Oil Filter
14 – Governor Lever
15 – Fuel Injection Pump
16 – Intake Manifold
17 – Air Intake Port (From Air Cleaner)
18 – Fuel Filter
19 – Fuel Return to Fuel Tank
20 – Top Filler Port (Engine Oil)
21 – Rocker Arm Cover
22 – Flywheel
23 – Starter Motor
24 – Exhaust Manifold
25 – Alternator

* Engine oil drain plug location may vary based on oil pan options.

**3TNV82A, 3TNV84, 3TNV84T, 3TNV88, 4TNV84, 4TNV84T, 4TNV88, 4TNV94L, 4TNV98,4TNV98T, 4TNV106, 4TNV106T, 3TNV82A-B, 3TNV84T-B, 3TNV88-B, 3TNV88-U, 4TNV88-B,4TNV88-U**

**Figure 2** shows where major direct injection engine components are located.

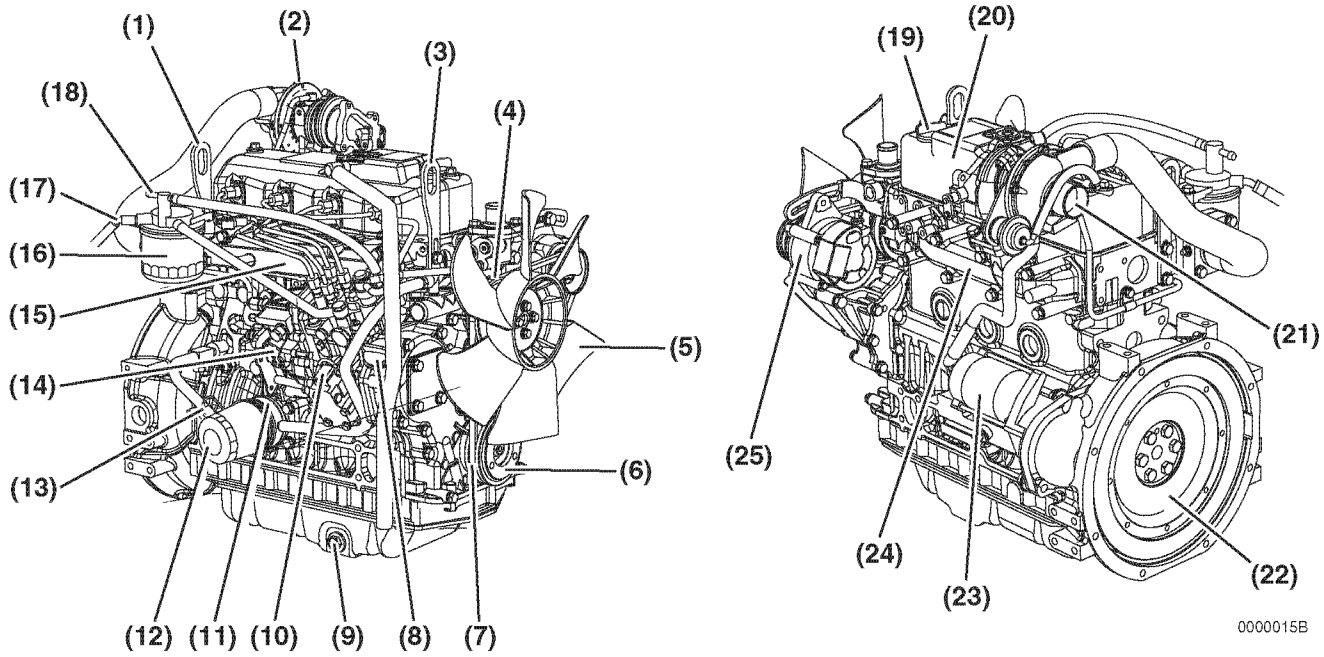


*Figure 2*

1 – Lifting Eye (Flywheel End)
2 – Turbocharger*
3 – Lifting Eye (Engine Cooling Fan End)
4 – Engine Coolant Pump
5 – Engine Cooling Fan
6 – Crankshaft V-Pulley
7 – V-Belt
8 – Side Filler Port (Engine Oil)
9 – Drain Plug (Engine Oil)**
10 – Fuel Injection Pump
11 – Engine Oil Cooler***
12 – Engine Oil Filter
13 – Dipstick (Engine Oil)
14 – Governor Lever
15 – Intake Manifold
16 – Fuel Filter
17 – Fuel Inlet
18 – Fuel Return to Fuel Tank
19 – Top Filler Port (Engine Oil)
20 – Rocker Arm Cover
21 – Air Intake Port (From Air Cleaner)
22 – Flywheel
23 – Starter Motor
24 – Exhaust Manifold
25 – Alternator

* Only applies to 3TNV84T, 4TNV84T, 4TNV98T, 4TNV106T.
** Engine oil drain plug location may vary based on oil pan options.
*** Not standard on all direct injection models.

### 4TNV84T-Z, 4TNV98-E, 4TNV98-Z, 4TNV98T-Z

**Figure 3** shows where major direct injection engine components are located.

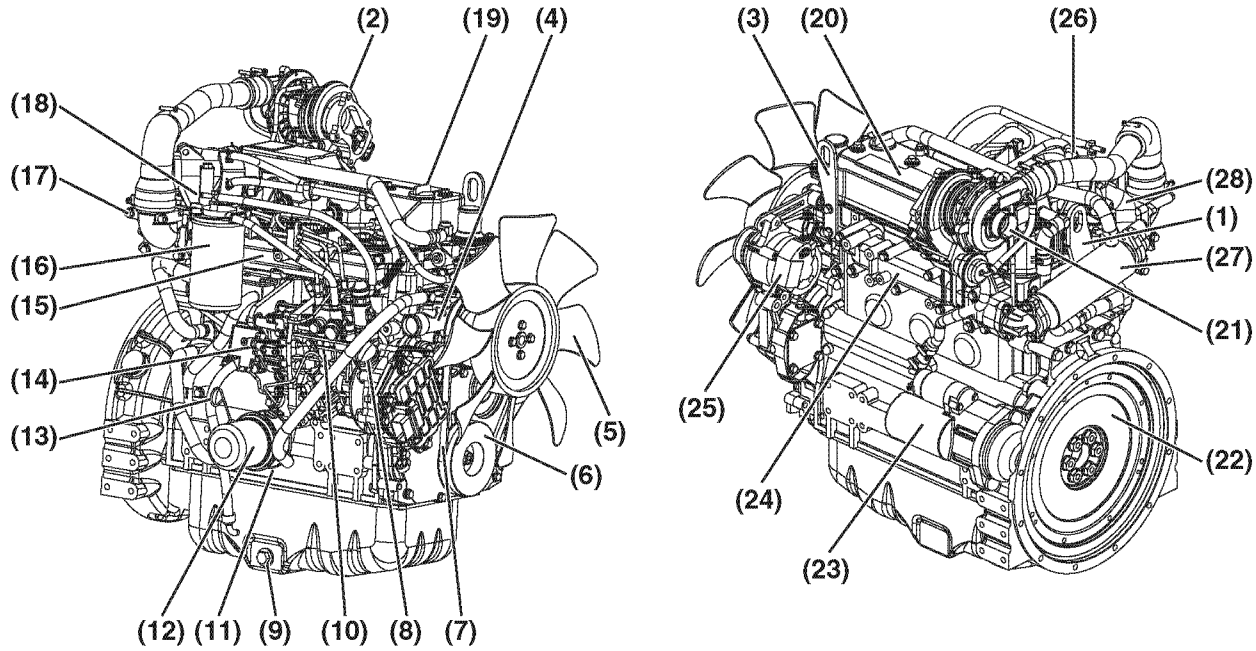


*Figure 3*

1 – Lifting Eye (Flywheel End)
2 – Turbocharger*
3 – Lifting Eye (Engine Cooling Fan End)
4 – Engine Coolant Pump
5 – Engine Cooling Fan
6 – Crankshaft V-Pulley
7 – V-Belt
8 – Side Filler Port (Engine Oil)
9 – Drain Plug (Engine Oil)**
10 – Fuel Injection Pump
11 – Engine Oil Cooler***
12 – Engine Oil Filter
13 – Dipstick (Engine Oil)
14 – Eco-governor
15 – Intake Manifold
16 – Fuel Filter
17 – Fuel Inlet
18 – Fuel Return to Fuel Tank
19 – Top Filler Port (Engine Oil)
20 – Rocker Arm Cover
21 – Air Intake Port (From Air Cleaner)
22 – Flywheel
23 – Starter Motor
24 – Exhaust Manifold
25 – Alternator
26 – EGR valve
27 – EGR cooler****
28 – EGR pipe

* Only applies to 4TNV84T-Z, 4TNV98T-Z.
** Engine oil drain plug location may vary based on oil pan options.
*** Not standard on all direct injection models.
**** Only applies to 4TNV84T-Z, 4TNV98T-Z.

# LOCATION OF LABELS

**Figure 4** shows the location of regulatory and safety labels on Yanmar TNV series indirect injection model engines.

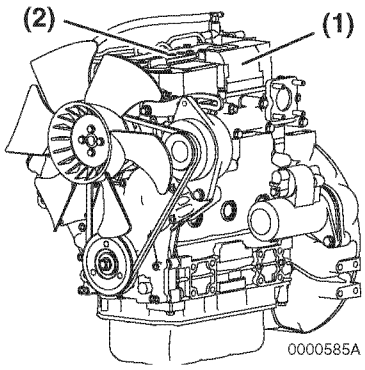


*Figure 4*

The typical location of the emission control information label is shown **(Figure 4, (1))**.

Typical location of the engine nameplate is shown **(Figure 4, (2))**.

**Figure 5** shows the location of regulatory and safety labels on Yanmar TNV series direct injection model engines.

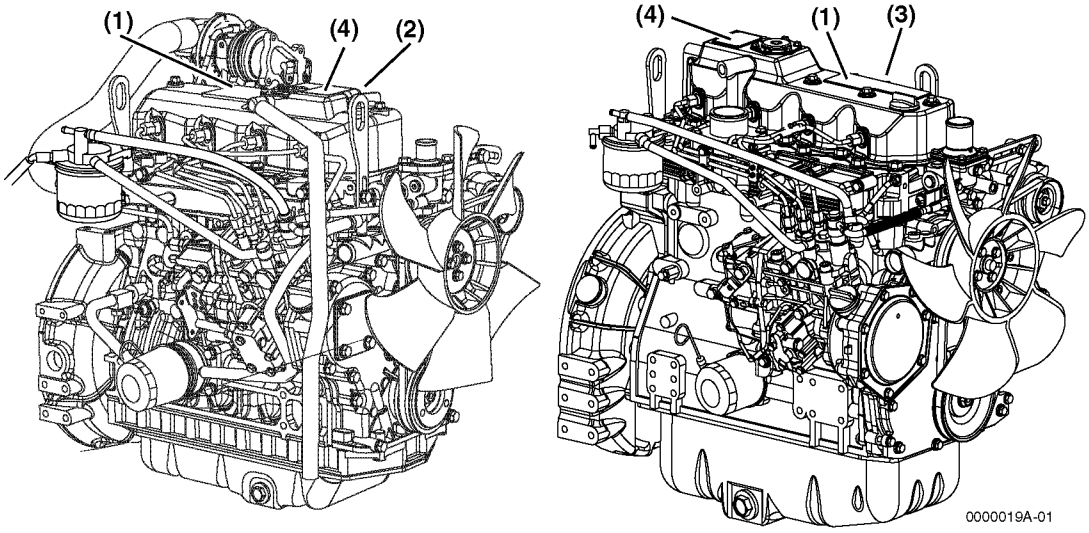


*Figure 5*

### Location of labels/nameplates on direct injection model engines

| Model | Engine Nameplate | EPA/ARB Certification Label | 97/68/EC Emission Control Label |
|---|---|---|---|
| 3TNV82A,3TNV84,3TNV84T,3TNV88<br>3TNV82A-B,3TNV88-B,3TNV88-U<br>3TNV84T-B | On the top of the locker arm cover(cooling fan end)<br>**Figure 5 left, (4)** | On the top of the locker arm cover (flywheel end)<br>**Figure 5 left, (1)** | On the exhaust side of the locker arm cover(near the flywheel)<br>**Figure 5 left, (2)** |
| 4TNV84,4TNV88,4TNV84T<br>4TNV88-B,4TNV88-U,4TNV84T-Z | On the top of the locker arm cover(cooling fan end)<br>**Figure 5 left, (4)** | On the top of the locker arm cover(flywheel end)<br>**Figure 5 left, (1)** | On the exhaust side of the locker arm cover(near the flywheel)<br>**Figure 5 left, (1)** |
| 4TNV94L,4TNV98,4TNV98T<br>4TNV106,4TNV106T<br>4TNV98-Z,4TNV98-E,4TNV98T-Z | On the top of the locker arm cover(flywheel end)<br>**Figure 5 right, (4)** | On the top of the locker arm cover(center)<br>**Figure 5 right, (1)** | On the top of the locker arm cover(fan end)<br>**Figure 5 right, (3)** |

### Engine Nameplate (Typical)

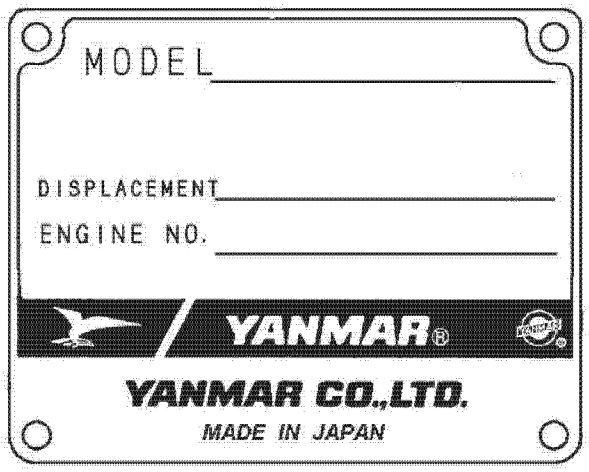


0003852

## EPA / ARB EMISSION CONTROL REGULATIONS - USA ONLY

Yanmar TNV engines meet Environmental Protection Agency (EPA) (U. S. Federal) emission control standards as well as the California Air Resources Board (ARB, California) regulations. Only engines that conform to ARB regulations can be sold in the State of California.

Refer to *EPA / ARB Installation Requirements USA Only on page 84 and Required EPA / ARB Maintenance USA Only on page 84* in the *Periodic Maintenance* section of this manual. Also refer to the *Yanmar Co., Ltd. Limited Emission Control System Warranty - USA Only on page vii*.

## EMISSION CONTROL LABELS

Since emission control regulations are being issued on a global basis, it is necessary to identify which regulations a particular engine complies with. We have listed several different types of labels you might find on your engine.

### EPA / ARB Labels (Typical)

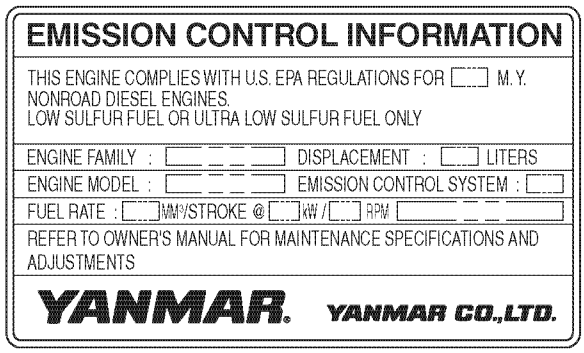


021751-00X

(EPA) Less Than 50 HP SAE (37kW)

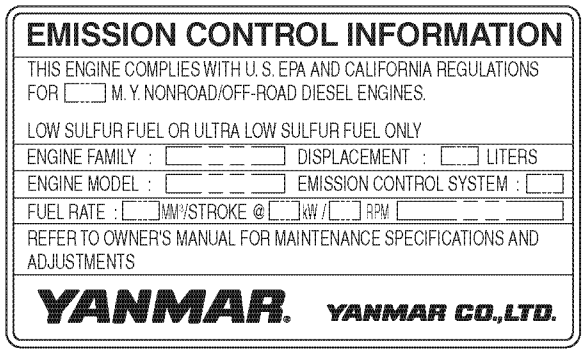


021752-00X

(EPA & ARB)

# THE 97/68/EC DIRECTIVE CERTIFIED ENGINES

The engines described in this manual have been certified by the 97/68/EC Directive.

To identify the engines that meet this certification, the 97/68/EC emission control label is affixed on the engines.

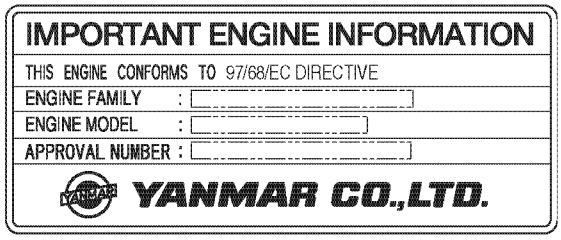


(97/68/EC)

# ENGINE FAMILY

The EPA / ARB labels and the 97/68/EC label all have an *Engine Family* field. The following is an explanation of the *Engine Family* designation:

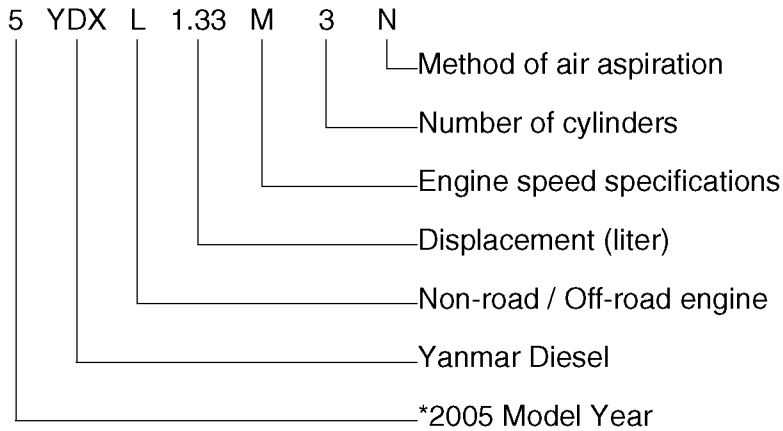


5*: 2005

6: 2006

7: 2007

# FUNCTION OF MAJOR ENGINE COMPONENTS

| Components | Functions |
|---|---|
| Air Cleaner | The air cleaner prevents airborne contaminants from entering the engine. Since the air cleaner is application specific, it must be carefully selected by an application engineer. It is not part of the basic engine package as shipped from the Yanmar factory. Periodic replacement of the air cleaner filter element is necessary. See the *Periodic Maintenance Schedule on page 85* for the replacement frequency. |
| Alternator | The alternator is driven by a V-belt which is powered by the crankshaft V-pulley. The alternator supplies electricity to the engine systems and charges the battery while the engine is running. |
| Dipstick (Engine Oil) | The engine oil dipstick is used to determine the amount of engine oil in the crankcase. |
| Electric Fuel Pump | The electric fuel pump makes sure there is a constant supply of diesel fuel to the fuel injection pump. The electric fuel pump is electro-magnetic and runs on 12VDC. An electric fuel pump may be installed as an option or as standard equipment. Standard equipment may vary based on engine model and specification. If an electric fuel pump is installed, turn the key switch to the ON position for 10 to 15 seconds to prime the fuel system. |
| Engine Oil Filter | The engine oil filter removes contaminants and sediment from the engine oil. Periodic replacement of the engine oil filter is necessary. See the *Periodic Maintenance Schedule on page 85* for the replacement frequency. |
| DI ENGINE Engine Oil Cooler (If Equipped) | The engine oil cooler helps to keep the engine oil cool. Engine coolant from the cooling system is circulated by the coolant pump through an adapter at the base of the engine to the oil cooler and then to the cylinder block and back to the coolant pump. |
| Fuel Filter | The fuel filter removes contaminants and sediments from the diesel fuel. Periodic replacement of the fuel filter is necessary. See the *Periodic Maintenance Schedule on page 85* for the replacement frequency. ***Please note that the word "diesel" is implied throughout this manual when the word "fuel" is used.*** |
| Fuel Filter / Water Separator | The fuel filter / water separator removes contaminants, sediment and water from diesel fuel going to the fuel filter. This is a required component of the fuel system and is standard equipment with every engine. The separator is installed between the fuel tank and the fuel pump. Periodically drain the water from the fuel filter / water separator using the drain cock at the bottom of the separator. |

| Components | Functions |
|---|---|
| IDI ENGINE Fuel Priming Lever | If the unit has a mechanical fuel pump, a fuel priming lever on the mechanical fuel pump primes the fuel system. The fuel system needs to be primed before you start the engine for the first time, if you run out of fuel, or if fuel system service is performed. To prime the fuel system, operate the fuel priming lever until the cup in the fuel filter is full of fuel. |
| Fuel Tank | The fuel tank is a reservoir that holds diesel fuel. When fuel leaves the fuel tank it goes to the fuel filter / water separator. Next, fuel is pumped to the fuel filter by the electric or mechanical fuel pump. Next the fuel goes to the fuel injection pump. Since fuel is used to keep the fuel injection pump cool and lubricated, more fuel than necessary enters the injection pump. When the injection pump pressure reaches a preset value, a relief valve allows excess fuel to be returned back to the fuel tank. The fuel tank is a required engine component. |
| IDI ENGINE Mechanical Fuel Pump | The mechanical fuel pump is a diaphragm-type of pump and is installed on the fuel injection pump body. The mechanical fuel pump is driven by a cam on the camshaft of the fuel injection pump. An electric fuel pump is available as an option. The mechanical fuel pump is not installed on the fuel injection pump if the electric fuel pump option is installed. |
| Side and Top Filler Port (Engine Oil) | You can fill the crankcase with engine oil from ***either the side or top filler port*** depending upon which one is most convenient. |
| Starter Motor | The starter motor is powered by the battery. When you turn the key switch in the operator's console to the START position, the starter motor engages with the ring gear installed on the flywheel and starts the flywheel in motion. |
| DI ENGINE Turbocharger (Only applies to 3TNV84T, 4TNV84T, 4TNV98T, 4TNV106T, 3TNV84T-B, 4TNV84T-Z, 4TNV98T-Z) | The turbocharger pressurizes the air coming into the engine. It is driven by a turbine that is energized by exhaust gases. |

# FUNCTION OF COOLING SYSTEM COMPONENTS

| Components | Functions |
|---|---|
| **Cooling System** | The TNV engine is liquid-cooled by means of a cooling system. The cooling system consists of a radiator, radiator cap, engine cooling fan, engine coolant pump, thermostat, and reserve tank. ***Note that all cooling system components are required for proper engine operation. Since some of the components are application specific, they must be carefully selected by an application engineer. The application specific items are not part of the basic engine package as shipped from the Yanmar factory.*** |
| • Engine Cooling Fan | The engine cooling fan is driven by a V-belt which is powered by the crankshaft V-pulley. The purpose of the engine cooling fan is to circulate air through the radiator. |
| • Engine Coolant Pump | The engine coolant pump circulates the engine coolant through the cylinder block and cylinder head and returns the engine coolant to the radiator. |
| • Radiator | The radiator acts as a heat exchanger. As the engine coolant circulates through the cylinder block it absorbs heat. The heat in the engine coolant is dissipated in the radiator. As the engine cooling fan circulates air through the radiator, the heat is transferred to the air. |
| • Radiator Cap | The radiator cap controls the cooling system pressure. The cooling system is pressurized to raise the boiling point of the engine coolant. As the engine coolant temperature rises, the system pressure and the coolant volume increases. When the pressure reaches a preset value, the release valve in the radiator cap opens and the excess engine coolant flows into the reserve tank. As the engine coolant temperature is reduced, the system pressure and volume is reduced and the vacuum valve in the radiator cap opens allowing engine coolant to flow from the reserve tank back into the radiator. |
| • Reserve Tank | The reserve tank contains the overflow of engine coolant from the radiator. If you need to add engine coolant to the system, add it to the reserve tank, not the radiator. |
| • Thermostat | A thermostat is placed in the cooling system to prevent engine coolant from circulating into the radiator until the engine coolant temperature reaches a preset temperature. When the engine is cold, no engine coolant flows through the radiator. Once the engine reaches its operating temperature the thermostat opens and allows engine coolant to flow through the radiator. By letting the engine warm up as quickly as possible, the thermostat reduces engine wear, deposits and emissions. |

# ELECTRONIC CONTROL SYSTEM

4TNV84T-Z, 4TNV98-E, 4TNV98-Z,
4TNV98T-Z

**⚠ WARNING**

- Never use the E-ECU for other purposes than intended or in other ways than specified by Yanmar. Doing so could result in the violation of emission control regulations and will void the product warranty.
- Improper use or misuse of the E-ECU may result in death or serious injury due to an abrupt and unexpected increase in engine speed.

9999999en

**⚠ WARNING**

- Be sure to use the E-ECU in conjunction with the engines whose models or serial numbers are specified by Yanmar.
  Other E-ECU/engine combinations than specified will void the engine warranty.
- Improper use or misuse of the E-ECU may result in death or serious injury due to an abrupt and unexpected increase in engine speed.

9999998en

**⚠ WARNING**

- Replacing the fuel injection pump involves rewriting the fuel injection data in the E-ECU.
  Be sure to contact your local Yanmar dealer before replacing the fuel injection pump.
  Failure to rewrite the fuel injection data before replacing the fuel injection pump will void the engine warranty.
- Improper use or misuse of the E-ECU may result in death or serious injury due to an abrupt and unexpected increase in engine speed.

9999997en

**⚠ WARNING**

- Replacing the E-ECU involves migrating the fuel injection data to the existing E-ECU to the new unit.
  Be sure to contact your local Yanmar dealer before replacing the E-ECU.
  Failure to migrate the fuel injection data before replacing the E-ECU will void the engine warranty.
- Improper use or misuse of the E-ECU may result in death or serious injury due to an abrupt and unexpected increase in engine speed.

9999996en

**CAUTION**

Shut down the engine if the fault indicator comes on.

Continuing running the engine with the fault indicator being on may result in a serious malfunction of or damage to the engine, and will void the engine warranty.

9999999en

**CAUTION**

Do not energize the starter for a period of longer than 15 seconds.

Take a pause of at least 30 seconds between energization of the starter.

Otherwise the starter could suffer damage.

9999998en

**CAUTION**

- High-pressure washing not recommended.
- Avoid using high-pressure washing for electronic or electric devices installed in, on or around the engine, including the E-ECU, relays and harness couplers.

Otherwise such devices may suffer malfunction due to water ingress into them.

9999997en

**CAUTION**

- Do not plug or unplug the E-ECU for a period of at least 6 seconds after power to the unit has been turned on or off.
- Do not touch connector pins of the E-ECU with bare hands.
  Doing so may result in corrosion of the connector pins and/or damage to the internal circuits of the E-ECU due to static electricity.
- Do not force a measuring probe into the female coupler.
  Doing so may cause contact failure of the connector pins, resulting in malfunction of the E-ECU.
- Take care to prevent water from entering the couplers when plugging or unplugging the connector.
  Water inside the couplers may cause corrosion, resulting in malfunction of the E-ECU.
- Avoid plugging/unplugging the connector more than approx. 10 times.
  Frequent plugging/unplugging of the connector may cause contact failure of the connector pins, resulting in malfunction of the E-ECU.
- Do not use the E-ECU that has ever suffered drop impact.

9999996en

**CAUTION**

Always check the battery for proper charge.

Otherwise the electronically controlled engines may fail to start.

9999995en

Model 4TNV84T-Z, 4TNV98-E, 4TNV98-Z and 4TNV98T-Z engines come with the Exhaust Gas Recirculation (EGR) system to conform to the next engine emission regulations (EPA 2008 rules). The EGR system and an electronic governor (Eco-governor) constitute an electronic engine control system.

The electronic engine control system regulates the exhaust gas recirculation flow rate and the fuel injection volume depending on the engine load and speed signals from the engine controller (E-ECU), so that the exhaust gas is kept clean according to the emission control regulations. **Figure 6** illustrates the electronic engine control system.

Features of the electronic engine control system include:

- Engine speed control schemes
  Droop control / Low-idling speed up / Auto deceleration / High-idling speed down / Black smoke suppression
- Starting aid
  Auto preheating / After heating
- Engine failure detection
- CAN communication with the control system of the driven machine

The above features are detailed in the table on the next pages.

Consult the operation manual for the driven machine for applicability of the features that depends on the machine.

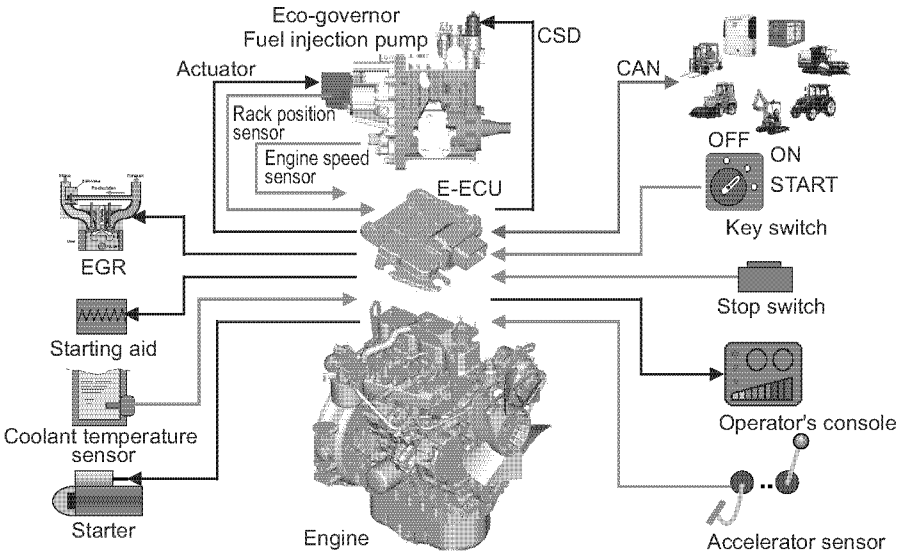


***Figure 6***

# MAIN ELECTRONIC CONTROL COMPONENTS AND FEATURES

**4TNV84T-Z, 4TNV98-E, 4TNV98-Z, 4TNV98T-Z**

| Component/Feature | | Description |
|---|---|---|
| Engine controller (E-ECU) | | Adjusts the rack position of the fuel injection pump depending on the speed command signal from the accelerator sensor, thus regulating the engine speed and power. The engine controller also regulates the opening of the EGR valve depending on the engine speed and power. It serves as the master station for the following components/control features. |
| Electronic governor (Eco-governor) | | Consists of the engine speed sensor, rack actuator, etc., and is directly connected to the fuel injection pump in order to regulate the rack position of the fuel injection pump depending on the signals communicated with the E-ECU. |
| Fuel injection pump (for Eco-governor) | | Is of single plunger type and equipped with a CSD solenoid valve that allows the fuel injection timing to advance and the injection quantity to increase, thereby improving the cold start performance of the engine. |
| EGR valve | | Controls the exhaust gas recirculation flow rate depending on the engine speed/load signals from the E-ECU. It is installed on the top of the exhaust manifold. |
| Accelerator sensor | | Unlike mechanical governors, the Eco-governor has no governor lever. The accelerator sensor serves as the governor lever to provide the speed command signal (voltage signal) to the E-ECU for engine speed control. It is installed in the operator cabin of the driven machine. Constant speed engines for e.g. generator use do not require accelerator sensors because the engine speed can be shifted via a switch on the operator's console. |
| | Optional | CAN communication capability is available as an option. |
| Fault indicator | | Is installed on the operator's console. If a fault occurs in the E-ECU or Eco-governor, the fault indicator flashes alerting the operator to a fault. The number of flashes and/or the flashing pattern vary depending on the type or source of the fault, enabling quick-fix. |
| | Optional | |

| Component/Feature | | Description |
|---|---|---|
| Engine diagnosis tool | | Allows the operator to troubleshoot the cause of a problem based on detailed information regarding the problem occurring in the E-ECU or Eco-governor. This tool can also be used for data maintenance tasks including programming and mapping. ***See Troubleshooting Chart on page 113.*** |
| | Option for service | |
| Engine coolant temperature sensor | | Allows the CSD and ERG to be controlled in engine cold-start conditions. |
| Glow plugs<br>Air heater | Optional | When the key switch is turned to the ON position, the glow plugs/air heater are/is energized for up to 15 seconds (glow plugs) or up to 23 seconds (air heater). The duration of energization depends on the engine coolant temperature. The HEAT indicator is on during energization. When the indicator goes out, turn the key switch to the START position to start the engine. |
| After heater | Optional | In extreme cold start conditions, the after heater is energized for up to 80 seconds or until the coolant temperature reaches 10°C after the engine has started, in order to help ensure the engine continues to run without stall.This option is not available for glow plug engines. |
| Droop control | Standard with VM series | Reduces the engine speed by a certain percentage from no load to full (rated) load in steady state operation. The same percentage droop is maintained even when the load increases at any no-load speed. |
| Isochronous control | Standard with CL series<br>Optional with VM series | Offers a constant engine speed from no load to full load. The engine speed does not decrease even when the load increases at any no-load speed. |
| Low-idling speed up | | Increases the low-idling speed to up to 1000 rpm depending on the engine coolant temperature. When the coolant temperature reaches a predetermined value, this feature returns the engine speed to the normal low idle setting, thus reducing the warm-up time. |
| High-idling speed down | Optional | Decreases the high-idling speed depending on the engine coolant temperature. When the coolant temperature falls to a predetermined value, this feature returns the engine speed to the normal high idle setting, thus minimizing the emission of white smoke at low temperatures. |
| Auto deceleration | Optional | Brings the running engine in low idle mode automatically when the accelerator pedal is not operated for a predetermined period of time. When the pedal is operated, i.e., the accelerator sensor is activated, the low idle mode is cancelled. |

# GAUGES AND INDICATORS

The operator's console provides you with the means to start and stop the unit and a series of gauges and indicators that inform you about the current status of the engine. This is a required engine component. Since the operator's console is application specific, it must be carefully selected by an application engineer. It is not part of the basic engine package as shipped from the Yanmar factory.

**CAUTION**

**The illustrations and descriptions of optional equipment in this manual, such as the operator's console, are for a typical engine installation. Refer to the documentation supplied by the optional equipment manufacturer for specific operation and maintenance instructions.**

0000018en

## Gauges

The following gauges are located on a typical operator's console. Some operator's consoles may not have the gauges described here or may have different gauges.

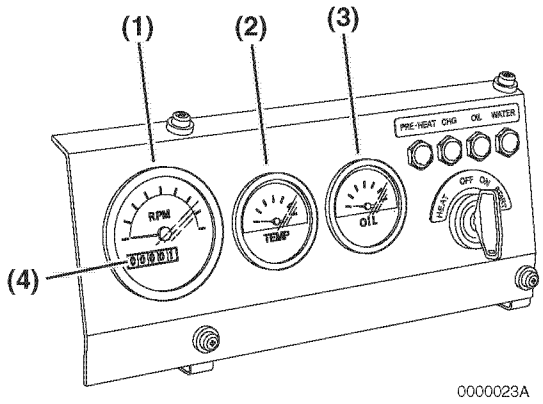


*Figure 7*

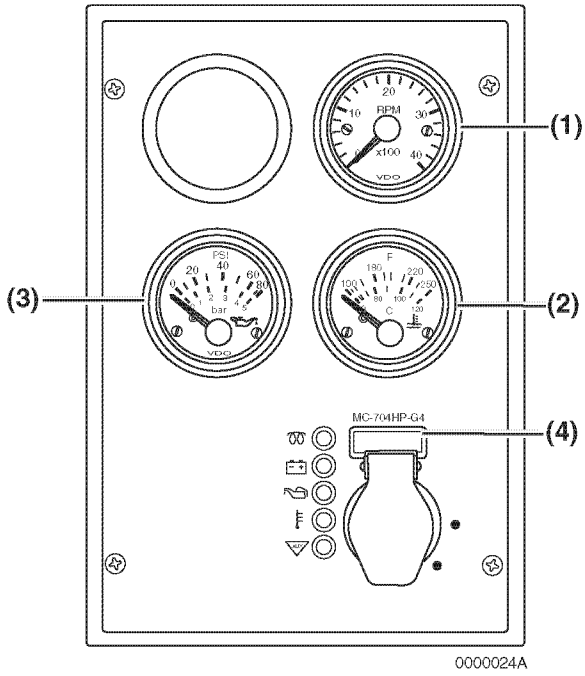


*Figure 8*

**Tachometer -** The tachometer display **(Figure 7, (1))** or **(Figure 8, (1))** shows the engine speed in revolutions per minute (RPM).

**Engine Coolant Temperature -** The engine coolant temperature display **(Figure 7, (2))** or **(Figure 8, (2))** shows the temperature of the engine coolant.

**Engine Oil Pressure -** The engine oil pressure display **(Figure 7, (3))** or **(Figure 8, (3))** shows the pressure of the engine oil.

**Hour Meter -** The hour meter display **(Figure 7, (4))** or **(Figure 8, (4))** shows the total number of hours the engine has run. This is useful for planning the *Periodic Maintenance Procedures on page 88.*

## Indicators

The following indicators are located on a typical operator's console.

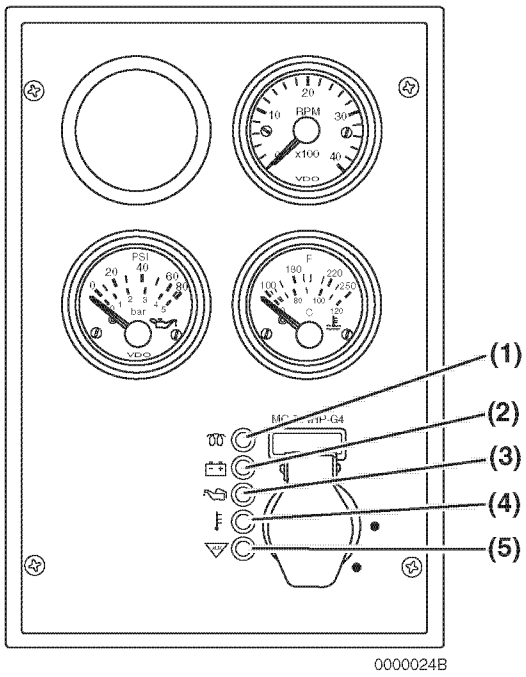


*Figure 9*

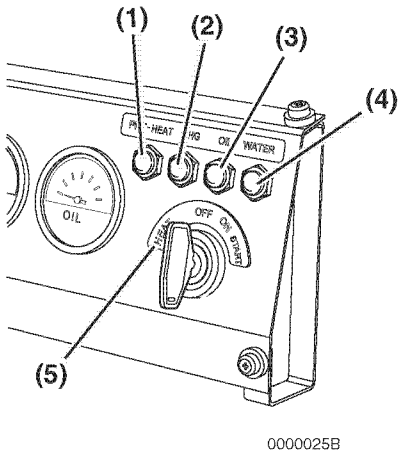


*Figure 10*

**HEAT indicator (Figure 9, (1))** - The pre-heat function is automatically activated when the key switch is turned to the ON position. The indicator flashes for several seconds (4 sec. for IDI models with glow plugs, 15 sec. for DI models with glow plugs or air heater) and when it goes out you can turn the key switch to START.

Some electronically controlled engines have the optional capability of controlling the glow plug/air heater energization time via the key switch. For details, consult the operation manual for the driven machine.

**HEAT indicator (Figure 10, (1))** - Note that on this type of panel you must turn the key to the HEAT position **(Figure 10, (5))** to activate the inlet air heater or glow plugs. The indicator will flash for several seconds (4 sec. for IDI models with glow plugs, 15 sec. for DI models with glow plugs or air heater) when you turn the key to HEAT and when it goes out, you can turn the key switch to START.

**Battery Charge (Figure 9, (2))** or **(Figure 10, (2))** - This indicator will come on if there is a problem in the charging system. This indicator does not indicate if the battery is discharged. *See Troubleshooting Chart on page 113.*

**Engine Oil Pressure (Figure 9, (3))** or **(Figure 10, (3))** - This indicator will come on if the engine oil pressure is below or exceeds normal limits. *See Troubleshooting Chart on page 113.*

**Engine Coolant Temperature (Figure 9, (4))** or **(Figure 10, (4))** - This indicator will come on if the engine coolant temperature exceeds normal limits. *See Troubleshooting Chart on page 113.*

**Auxiliary (Figure 9, (5))** - Used for special applications.

# GAUGES AND INDICATORS OF ELECTRONIC CONTROL SYSTEM

**4TNV84T-Z, 4TNV98-E, 4TNV98-Z, 4TNV98T-Z**

## Gauges

The following gauges are located on a typical operator's console of the electronically controlled engines. Some operator's consoles may not have the gauges described here or may have different gauges.

**CAUTION**

**The illustrations and descriptions of optional equipment in this manual, such as the operatorÅfs console, are for a typical engine installation. Refer to the documentation supplied by the optional equipment manufacturer for specific operation and maintenance instructions.**

9999994en

## Indicators

The following indicators are located on a typical operator's console.

See the *Gauges and Indicators* section for description of indicators that are not described below.

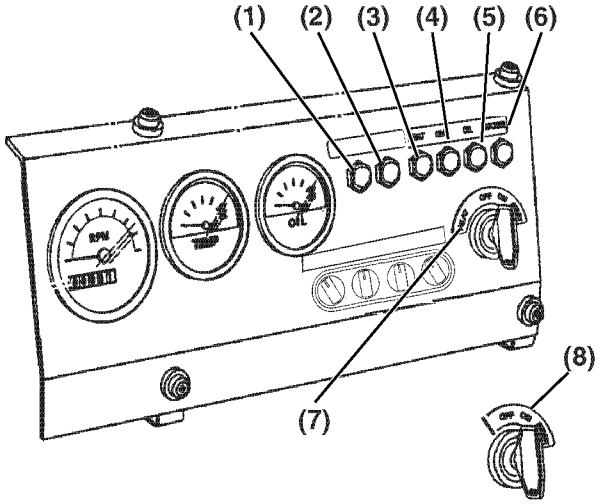


Optional key switch:Turning it to ON energizes the glow plugs or air heater automatically.

***Figure 11***

**Figure 11** Typical Operator's Console

**Fault (Figure 11, (1)) (optional)** - This indicator will flash if a fault occurs in the E-ECU or Eco-governor. The number of flashes and/or the flashing pattern vary depending on the type or source of the fault. *See Troubleshooting Chart on page 113.*

**Auxiliary (Figure 11, (2))** - Reserved as an optional fault indicator.

**HEAT (Figure 11, (3))** - This indicator will come on when the key switch is turned to the HEAT position **(Figure 11, (7))** and stay on as long as the glow plugs (of model 3TN84T-Z only) or air heater are/is energized (15 sec. for models with glow plugs or air heater) during engine cold start. When the indicator goes out, you can turn the key switch to START.

Turning the optional key switch **(Figure 11, (8))** to ON allows you to energize the glow plugs for up to 15 sec. or the air heater up to 23 sec. depending on the engine coolant temperature.

When an optional after heater is installed, it is energized for up to 80 sec. after the engine has started, during which, however, the indicator is not on.

**Others (optional)** - Other optional indicators including those for indicating the air cleaner is clogged or the water separator is filled with water can also be installed on the console. See the operation manual for the driven machine for details.

Machine events including alarms and faults are all stored in memory of the E-ECU and can be loaded into the service tool.

# CONTROLS

## Key Switch

The key switch for the operator's console illustrated in **Figure 12** has three positions - OFF, ON and START.

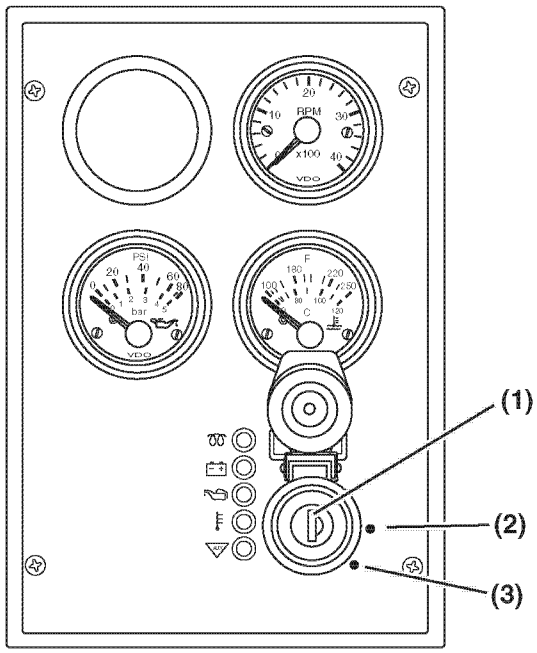


*Figure 12*

**CAUTION**

**For maximum engine life, Yanmar recommends that when shutting the engine down, you allow the engine to idle, without load, for five minutes. This will allow the engine components that operate at high temperatures, such as the turbocharger (if equipped) and exhaust system, to cool slightly before the engine itself is shut down.**

0000008en

**OFF** (key straight up and down) **(Figure 12, (1))** and **(Figure 13, (1))** - When you turn the key to this position the engine shuts down. Electric current to the gauges and indicators is shut off. You can insert and remove the key in this position.

**ON (Figure 12, (2))** and **(Figure 13, (2))** - This is the position the key will be in when the engine is running. When the engine is not running, use this position to energize the gauges, indicators, electric fuel pump and auxiliary devices.

**CAUTION**

**NEVER hold the key in the START position for longer than 15 seconds or the starter motor will overheat.**

0000007en

**START (Figure 12, (3))** and **(Figure 13, (3))** - Turn the key to this position to start the engine. As soon as the engine starts, release the key and it will automatically return to the ON position. Some key switches may be equipped with a feature that prevents you from turning the key to the START position while the engine is running. When operating a key switch with this feature, you cannot turn the key to the START position without first returning the key to the OFF position.

The key switch for the operator's console illustrated in **Figure 13** has four positions - OFF, ON, START, and HEAT.

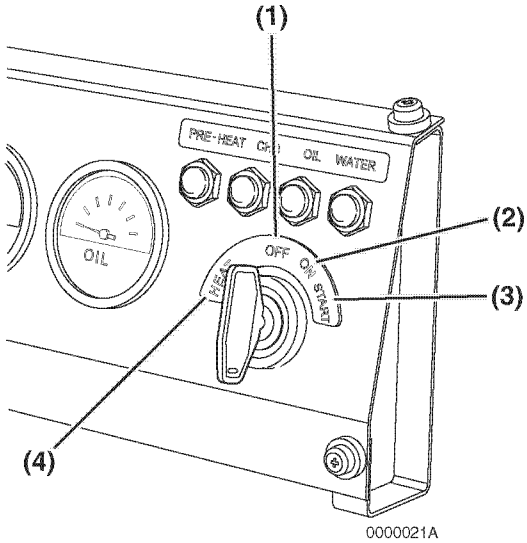


*Figure 13*

**CAUTION**

**For maximum engine life, Yanmar recommends that when shutting the engine down, you allow the engine to idle, without load, for five minutes. This will allow the engine components that operate at high temperatures, such as the turbocharger (if equipped) and exhaust system, to cool slightly before the engine itself is shut down.**

0000008en

**CAUTION**

**NEVER hold the key in the START position for longer than 15 seconds or the starter motor will overheat.**

0000007en

**HEAT (Figure 13, (4))** - You must turn the key to the HEAT position to activate the inlet air heater. The indicator will flash for several seconds when you turn the key to HEAT. You can turn the key to START when the indicator goes out.

## Glow Plugs

**3TNV82A-B,3TNV88-B,**
**3TNV88-U,4TNV88-B,4TNV88-U**

Glow plugs help make the engine easy to start at cold temperatures. During the engine starting sequence, the glow plugs are activated for approximately 4 seconds. After the pre-heat indicator goes out, the engine can be started.

These plugs are installed in the cylinder head swirl chambers for IDI engines or in the combustion chambers for DI engines.

## Inlet Air Heater

**4TNV84T-Z,4TNV98-Z,4TNV98-E,**
**4TNV98T-Z**
**3TNV82A,3TNV84,3TNV84T,3TNV88**
**4TNV84,4TNV84T,4TNV88,4TNV94L**
**4TNV98,4TNV98T,4TNV106,4TNV106T**

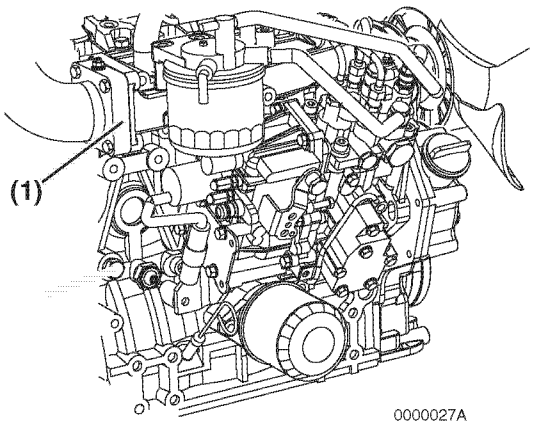


***Figure 14***

The inlet air heater **(Figure 14, (1))** is located on the intake manifold. Heated inlet air helps the engine to start easier in cold weather. During the engine starting sequence the inlet air heater is activated for approximately 15 seconds. After the pre-heat indicator goes out, the engine can be started.

## Governor Lever

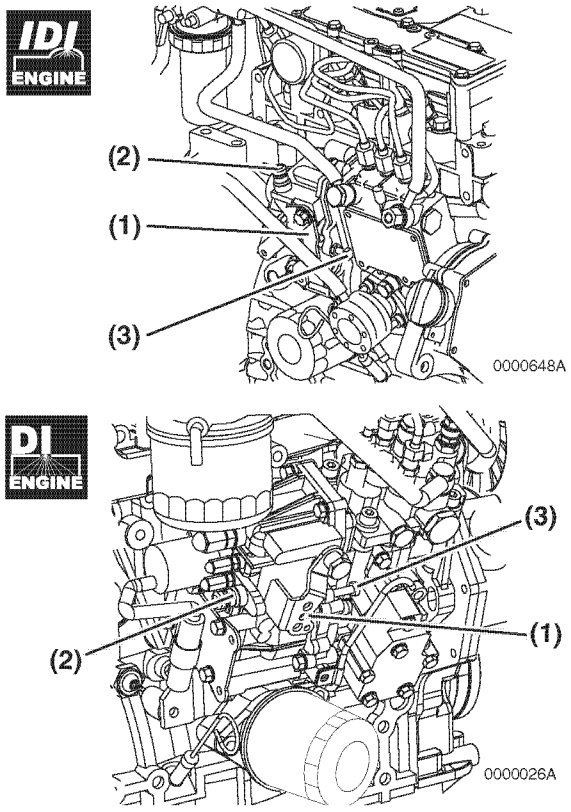


*Figure 15*

**CAUTION**

**NEVER attempt to adjust the low or high idle speed limit screw. This may impair the safety and performance of the machine and shorten its life. If adjustment is ever required, contact your authorized Yanmar industrial engine dealer or distributor.**

0000045en

The governor lever **(Figure 15, (1))** controls the engine speed. The lever is linked to the engine speed control device in the driven machine.

The high idle speed limit screw **(Figure 15, (2))** restricts the maximum engine speed when the engine is operated without a load.

The low idle speed limit screw **(Figure 15, (3))** sets engine speed while it is idling.

## Speed Control of Electronically Controlled Engines

**4TNV84T-Z, 4TNV98-Z**

**4TNV98-E, 4TNV98T-Z**

The electronically controlled engines have no governor lever. For these engines, the position signal of the throttle lever or accelerator pedal of the driven machine is converted into an electric signal by the accelerator sensor **Figure 16**, which is then delivered to the rack actuator of the Eco-governor **Figure 18** through the E-ECU **Figure 17**, allowing the engine speed to be controlled.

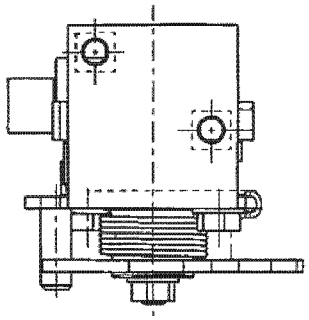

*Figure 16*

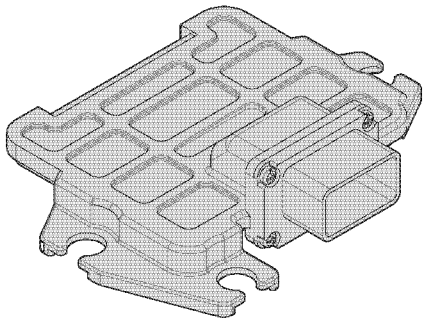

*Figure 17*

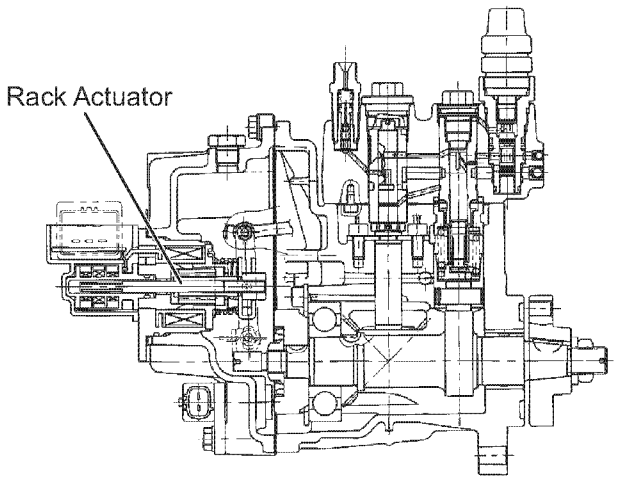


*Figure 18*

## Engine Stop Solenoid

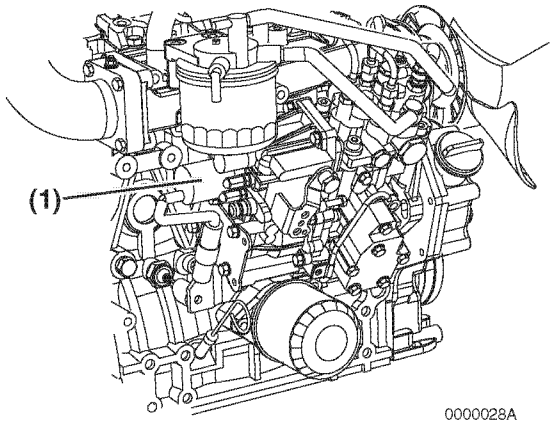


*Figure 19*

When the key is turned to the ON position, the engine stop solenoid **(Figure 19, (1))** is energized and allows the fuel injection pump to deliver fuel to the engine, allowing the engine to be started. When the key is turned to the OFF position, the engine stop solenoid is de-energized and shuts off the fuel supply from the fuel injection pump to the engine, causing the engine to stop.

The electronically controlled engines have no engine stop solenoid. The E-ECU controls the engine start/stop sequence.

## ELECTRONIC ENGINE SPEED CONTROL

**4TNV84T-Z, 4TNV98-E, 4TNV89-Z, 4TNV98T-Z**

### Engine Speed Curves

**Figure 20** shows typical engine speed curves that outline the relationship between engine speed and load.

#### *Droop Control*

The VM series engines for general use are designed so that the engine speed is reduced by a certain percentage from 30% load to full rated load. See curves **(1)** in **Figure 20** below. The same percentage droop is maintained at any no-load speed.

#### *Isochronous Control*

The CL series consists of isochronous design engines, the speed of which is kept constant from no load to full rated load. See curves **(2)** in **Figure 20** below.

Some VM series engines for general use may be custom-engineered and have the isochronous capability. Consult the operation manual for the driven machine for application details of such engines.

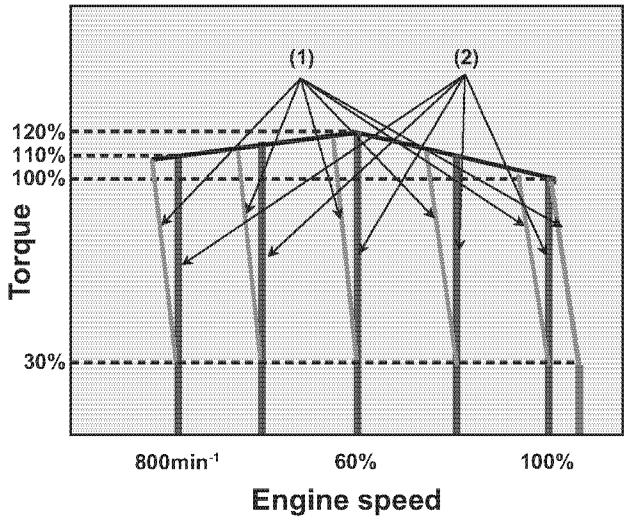


*Figure 20*

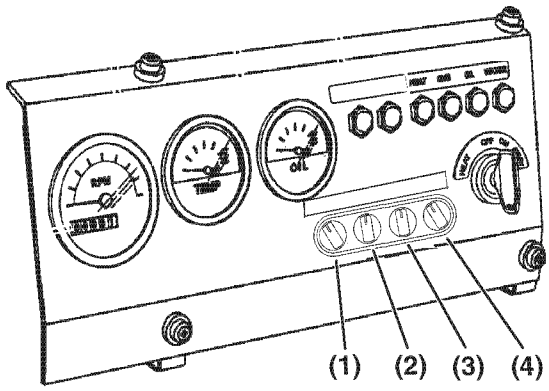


*Figure 21*

**Figure 21** Typical Operator's Console and Switch Arrangement

### *Low-idling Speed Up*

This feature increases the low-idling speed to some extent depending on the engine coolant temperature. When the coolant temperature reaches a predetermined value, this feature returns the engine speed to the normal low idle setting, thus reducing the warm-up time.

### *Auto Deceleration (optional)*

This feature brings the running engine in low idle mode automatically when the accelerator pedal is not operated for a predetermined period of time. When the pedal is operated, i.e., the accelerator sensor is activated, the low idle mode is cancelled.

A certain ON/OFF combination of switches **(1) - (4)** on the operator's console **Figure 21** will implement this optional feature. For details, see the operation manual for the driven machine.

### *High-idling Speed Down (optional)*

This feature decreases the high-idling speed depending on the engine coolant temperature. When the coolant temperature falls to a predetermined value, this feature returns the engine speed to the normal high idle setting, thus minimizing the emission of white smoke at low temperatures.

A certain ON/OFF combination of switches **(1) - (4)** on the operator's console **Figure 21** will implement this optional feature. For details, see the operation manual for the driven machine.

### *Others*

Other optional features can be provided by selecting certain ON/OFF combinations of switches **(1) - (4)** on the operator's console **Figure 21** will implement this optional feature. For details, see the operation manual for the driven machine.

This Page Intentionally Left Blank

# BEFORE YOU OPERATE

This section of the *Operation Manual* describes the diesel fuel, engine oil, and engine coolant specifications and how to replenish them. It also describes the daily engine checkout.

**⚠ DANGER**

**SCALD HAZARD!**

- **NEVER remove the radiator cap if the engine is hot. Steam and hot engine coolant will spurt out and seriously burn you. Allow the engine to cool down before you attempt to remove the radiator cap.**
- **Tighten the radiator cap securely after you check the radiator. Steam can spurt out during engine operation if the cap is loose.**
- **ALWAYS check the level of the engine coolant by observing the reserve tank.**
- **Failure to comply will result in death or serious injury.**

0000002en

**⚠ DANGER**

**FIRE AND EXPLOSION HAZARD!**

- **Diesel fuel is flammable and explosive under certain conditions.**
- **When you prime the fuel system, operate the fuel priming lever of the mechanical fuel pump several times until the fuel filter cup is filled with fuel.**
- **NEVER open the air vent valve while the fuel system is being primed. The fuel filter has an internal air bleed port.**
- **Failure to comply will result in death or serious injury.**

0000016en

**⚠ DANGER**

**FIRE AND EXPLOSION HAZARD!**

- Diesel fuel is extremely flammable and explosive under certain conditions.
- If the unit has an electric fuel pump, when you prime the fuel system, turn the key switch to the ON position for 10 to 15 seconds to allow the electric fuel pump to prime the system.
- If the unit has a mechanical fuel pump, when you prime the fuel system, operate the fuel priming lever of the mechanical fuel pump several times until the fuel filter cup is filled with fuel.
- NEVER open the air vent valve while the fuel system is being primed. The fuel filter has an internal air bleed port.
- Failure to comply will result in death or serious injury.

0000013en

**⚠ DANGER**

**FIRE AND EXPLOSION HAZARD!**

- Diesel fuel is flammable and explosive under certain conditions.
- Only fill the fuel tank with diesel fuel. Filling the fuel tank with gasoline may result in a fire and will damage the engine.
- NEVER refuel with the engine running.
- Wipe up all spills immediately.
- Keep sparks, open flames or any other form of ignition (match, cigarette, static electric source) well away when refueling.
- NEVER overfill the fuel tank.
- Fill the fuel tank. Store any containers containing fuel in a well-ventilated area, away from any combustibles or sources of ignition.
- Failure to comply will result in death or serious injury.

0000005en

**⚠ DANGER**

**FIRE AND EXPLOSION HAZARD!**

- Diesel fuel is flammable and explosive under certain conditions.
- Be sure to place the diesel fuel container on the ground when transferring the diesel fuel from the pump to the container. Hold the hose nozzle firmly against the side of the container while filling it. This prevents static electricity buildup which could cause sparks and ignite fuel vapors.
- NEVER place diesel fuel or other flammable material such as oil, hay or dried grass close to the engine during engine operation or shortly after shutdown.
- Failure to comply will result in death or serious injury.

0000014en

**⚠ DANGER**

**FIRE AND EXPLOSION HAZARD!**

- Diesel fuel is flammable and explosive under certain conditions.
- Before you operate the engine, check for fuel leaks. Replace rubberized fuel hoses every two years or every 2000 hours of engine operation, whichever comes first, even if the engine has been out of service. Rubberized fuel lines tend to dry out and become brittle after two years or 2000 hours of engine operation, whichever comes first.
- Failure to comply will result in death or serious injury.

0000015en

**⚠ WARNING**

**BURN HAZARD!**

- Wait until the engine cools before you drain the engine coolant. Hot engine coolant may splash and burn you.
- Failure to comply could result in death or serious injury.

0000016en

## ⚠ WARNING

### HIGH-PRESSURE HAZARD!

- Avoid skin contact with the high-pressure diesel fuel spray caused by a fuel system leak such as a broken fuel injection line. High-pressure fuel can penetrate your skin and result in serious injury. If you are exposed to high-pressure fuel spray, obtain prompt medical treatment.
- NEVER check for a fuel leak with your hands. ALWAYS use a piece of wood or cardboard. Have your authorized Yanmar industrial engine dealer or distributor repair the damage.
- Failure to comply could result in death or serious injury.

0000008en

## CAUTION

- Only use the engine oil specified. Other engine oils may affect warranty coverage, cause internal engine components to seize and / or shorten engine life.
- Prevent dirt and debris from contaminating the engine oil. Carefully clean the oil cap / dipstick and the surrounding area before you remove the cap.
- NEVER mix different types of engine oil. This may adversely affect the lubricating properties of the engine oil.
- NEVER overfill. Overfilling may result in white exhaust smoke, engine overspeed or internal damage.

0000005en

## ⚠ CAUTION

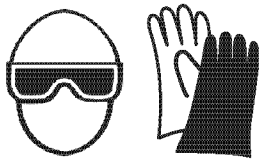

### COOLANT HAZARD!

- Wear eye protection and rubber gloves when you handle long life or extended life engine coolant. If contact with the eyes or skin should occur, flush eyes and wash immediately with clean water.
- Failure to comply may result in minor or moderate injury.

0000005en

## CAUTION

- Only use diesel fuels recommended by Yanmar for the best engine performance, to prevent engine damage and to comply with EPA / ARB warranty requirements.
- Only use clean diesel fuel.
- NEVER remove the primary strainer (if equipped) from the fuel tank filler port. If removed, dirt and debris could get into the fuel system causing it to clog.

0000004en

**CAUTION**

- Only use the engine coolant specified. Other engine coolants may affect warranty coverage, cause an internal buildup of rust and scale and / or shorten engine life.
- Prevent dirt and debris from contaminating the engine coolant. Carefully clean the radiator cap and the surrounding area before you remove the cap.
- NEVER mix different types of engine coolants. This may adversely affect the properties of the engine coolant.

0000006en

**CAUTION**

If any problem is noted during the visual check, the necessary corrective action should be taken before you operate the engine.

0000021en

# DIESEL FUEL

## Diesel Fuel Specifications

Diesel fuel should comply with the following specifications. The table lists several worldwide specifications for diesel fuels.

| Diesel Fuel Specification | Location |
|---|---|
| **No. 2-D, No. 1-D, ASTM D975-94** | USA |
| **EN590:96** | European Union |
| **ISO 8217 DMX** | International |
| **BS 2869-A1 or A2** | United Kingdom |
| **JIS K2204 Grade No.2** | Japan |
| **KSM-2610** | Korea |
| **GB252** | China |

### Additional Technical Fuel Requirements

- The fuel cetane number should be equal to 45 or higher.
- The sulfur content must not exceed 0.5% by volume. Less than 0.05% is preferred.For electronically controlled EGR engines, use fuel with sulfur content of less than 0.1%.
  A higher sulfur content fuel may cause sulfuric acid corrosion in the cylinders of the engines. Especially in U.S.A. and Canada, Low Sulfur (300-500mg/kg sulfur content) or Ultra Low Sulfur fuel should be used.
- Bio-Diesel fuels. *See Bio-Diesel Fuels on page 45*.
- NEVER mix kerosene, used engine oil, or residual fuels with the diesel fuel.
- Water and sediment in the fuel should not exceed 0.05% by volume.
- Keep the fuel tank and fuel-handling equipment clean at all times.
- Poor quality fuel can reduce engine performance and / or cause engine damage.
- Fuel additives are not recommended. Some fuel additives may cause poor engine performance. Consult your Yanmar representative for more information.
- Ash content not to exceed 0.01% by volume.
- Carbon residue content not to exceed 0.35% by volume. Less than 0.1% is preferred.
- Total aromatics content should not exceed 35% by volume. Less than 30% is preferred.
- PAH (polycyclic aromatic hydrocarbons) content should be below 10% by volume.
- Metal content of Na, Mg, Si, and Al should be equal to or lower than 1 mass ppm. (Test analysis method JPI-5S-44-95)
- Lubricity: Wear mark of WS1.4 should be Max. 0.018 in. (460 µm) at HFRR test.

## Bio-Diesel Fuels

In Europe and in the United States, as well as some other countries, non-mineral oil based fuel resources such as RME (Rapeseed Methyl Ester) and SOME (Soybean Methyl Ester), collectively known as FAME (Fatty Acid Methyl Esters), are being used as extenders for mineral oil derived diesel fuels.

Yanmar approves the use of bio-diesel fuels that do not exceed a blend of 5% (by volume) of FAME with 95% (by volume) of approved mineral oil derived diesel fuel. Such bio-diesel fuels are known in the marketplace as B5 diesel fuels.

**These B5 diesel fuels must meet certain requirements.**

1. The bio-fuels must meet the minimum specifications for the country in which they are used.
   - In Europe, bio-diesel fuels must comply with the European Standard EN14214.
   - In the United States, bio-diesel fuels must comply with the American Standard ASTM D-6751.
2. Bio-fuels should be purchased only from recognized and authorized diesel fuel suppliers.

**Precautions and concerns regarding the use of bio-fuels:**

1. Free methanol in FAME may result in corrosion of aluminum and zinc FIE components.
2. Free water in FAME may result in plugging of fuel filters and increased bacterial growth.
3. High viscosity at low temperatures may result in fuel delivery problems, injection pump seizures, and poor injection nozzle spray atomization.
4. FAME may have adverse effects on some elastomers (seal materials) and may result in fuel leakage and dilution of the engine lubricating oil.
5. Even bio-diesel fuels that comply with a suitable standard as delivered, will require additional care and attention to maintain the quality of the fuel in the equipment or other fuel tanks. It is important to maintain a supply of clean, fresh fuel. Regular flushing of the fuel system, and / or fuel storage containers, may be necessary.
6. The use of bio-diesel fuels that do not comply with the standards as agreed to by the diesel engine manufacturers and the diesel fuel injection equipment manufacturers, or bio-diesel fuels that have degraded as per the precautions and concerns above, may affect the warranty coverage of your engine. *See Yanmar Limited Warranty on page iii.*

## Filling the Fuel Tank

**⚠ DANGER**

**FIRE AND EXPLOSION HAZARD!**

- Diesel fuel is flammable and explosive under certain conditions.
- Only fill the fuel tank with diesel fuel. Filling the fuel tank with gasoline may result in a fire and will damage the engine.
- NEVER refuel with the engine running.
- Wipe up all spills immediately.
- Keep sparks, open flames or any other form of ignition (match, cigarette, static electric source) well away when refueling.
- NEVER overfill the fuel tank.
- Fill the fuel tank. Store any containers containing fuel in a well-ventilated area, away from any combustibles or sources of ignition.
- Failure to comply will result in death or serious injury.

0000005en

**⚠ DANGER**

**FIRE AND EXPLOSION HAZARD!**

- Diesel fuel is flammable and explosive under certain conditions.
- Be sure to place the diesel fuel container on the ground when transferring the diesel fuel from the pump to the container. Hold the hose nozzle firmly against the side of the container while filling it. This prevents static electricity buildup which could cause sparks and ignite fuel vapors.
- NEVER place diesel fuel or other flammable material such as oil, hay or dried grass close to the engine during engine operation or shortly after shutdown.
- Failure to comply will result in death or serious injury.

0000014en

**⚠ DANGER**

**FIRE AND EXPLOSION HAZARD!**

- **Diesel fuel is flammable and explosive under certain conditions.**
- **Before you operate the engine, check for fuel leaks. Replace rubberized fuel hoses every two years or every 2000 hours of engine operation, whichever comes first, even if the engine has been out of service. Rubberized fuel lines tend to dry out and become brittle after two years or 2000 hours of engine operation, whichever comes first.**
- **Failure to comply will result in death or serious injury.**

0000015en

**CAUTION**

- **Only use diesel fuels recommended by Yanmar for the best engine performance, to prevent engine damage and to comply with EPA / ARB warranty requirements.**
- **Only use clean diesel fuel.**
- **NEVER remove the primary strainer (if equipped) from the fuel tank filler port. If removed, dirt and debris could get into the fuel system causing it to clog.**

0000004en

### Filling the Fuel Tank (Continued)

Note that a typical fuel tank is shown. The fuel tank on your equipment may be different.

1. Clean the area around the fuel cap **(Figure 1, (1))**.
2. Remove the fuel cap from the fuel tank **(Figure 1, (2))**.
3. Observe the fuel level sight gauge **(Figure 1, (3))** and stop filling when gauge shows fuel tank is full. NEVER overfill the fuel tank.
4. Replace the fuel cap **(Figure 1, (1))**, hand tighten. Over tightening the fuel cap will damage it.

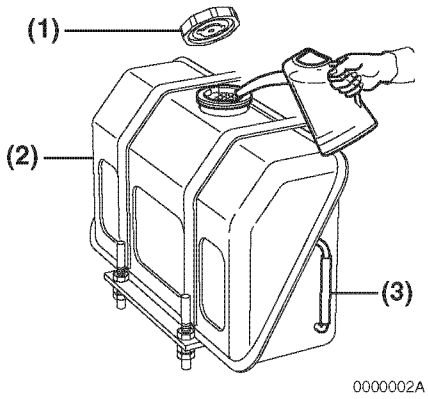


*Figure 1*

## Priming the Fuel System

**⚠ DANGER**

**FIRE AND EXPLOSION HAZARD!**

- **Diesel fuel is flammable and explosive under certain conditions.**
- **If the unit has an electric fuel pump, when you prime the fuel system, turn the key switch to the ON position for 10 to 15 seconds to allow the electric fuel pump to prime the system.**
- **If the unit has a mechanical fuel pump, when you prime the fuel system, operate the fuel priming lever of the mechanical fuel pump several times until the fuel filter cup is filled with fuel.**
- **Failure to comply will result in death or serious injury.**

0000010en

IDI ENGINE

The fuel system needs to be primed under certain conditions:

- Before starting the engine for the first time
- After running out of fuel and fuel has been added to the fuel tank
- After fuel system maintenance such as changing the fuel filter and draining the fuel filter / water separator, or replacing a fuel system component.

**To prime the fuel system if an electric fuel pump is installed:**

1. Turn the key to the ON position for 10 to 15 seconds. This will allow the electric fuel pump to prime the fuel system.
2. NEVER use the starter motor to crank the engine in order to prime the fuel system. This may cause the starter motor to overheat and damage the coils, pinion and / or ring gear.

**To prime the fuel system if a mechanical fuel pump is installed:**

1. Operate the fuel priming lever **(Figure 2, (1))** several times until the fuel filter cup **(Figure 2, (2))** is filled with fuel.
2. NEVER use the starter motor to crank the engine in order to prime the fuel system. This may cause the starter motor to overheat and damage the coils, pinion and / or ring gear.

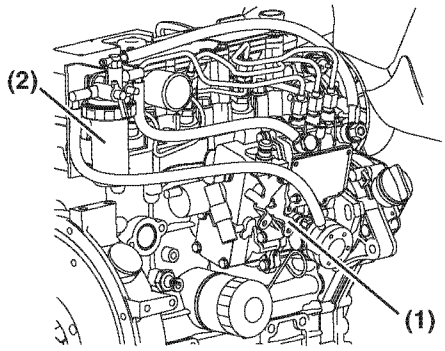


0000649A

***Figure 2***

The fuel system needs to be primed under certain conditions:

- Before starting the engine for the first time
- After running out of fuel and fuel has been added to the fuel tank
- After fuel system maintenance such as changing the fuel filter and draining the fuel filter / water separator, or replacing a fuel system component.

To prime the fuel system:

1. Turn the key to the ON position for 10 to 15 seconds. This will allow the electric fuel pump to prime the fuel system.
2. NEVER use the starter motor to crank the engine in order to prime the fuel system. This may cause the starter motor to overheat and damage the coils, pinion and / or ring gear.

# ENGINE OIL

**CAUTION**

- **Only use the engine oil specified. Other engine oils may affect warranty coverage, cause internal engine components to seize and / or shorten engine life.**
- **Prevent dirt and debris from contaminating the engine oil. Carefully clean the oil cap / dipstick and the surrounding area before you remove the cap.**
- **NEVER mix different types of engine oil. This may adversely affect the lubricating properties of the engine oil.**
- **NEVER overfill. Overfilling may result in white exhaust smoke, engine overspeed or internal damage.**

0000005en

## Engine Oil Specifications

Use an engine oil that meets or exceeds the following guidelines and classifications:

### Service Categories

- API Service Categories CD or higher (Use an API CF quality oil for electronically controlled engines.)
- ACEA Service Categories E-3, E-4, and E-5
- JASO Service Category DH-1

### Definitions

- API Classification (American Petroleum Institute)
- ACEA Classification (Association des Constructeurs Européens d'Automobilies)
- JASO (Japanese Automobile Standards Organization)

Notes:

1. Be sure the engine oil, engine oil storage containers, and engine oil filling equipment are free of sediments and water.
2. Change the engine oil after the first 50 hours of operation and then at every 250 hours thereafter.
3. Select the oil viscosity based on the ambient temperature where the engine is being operated. See the SAE Service Grade Viscosity Chart **(Figure 3)**.
4. Yanmar does not recommend the use of engine oil "additives."

### Additional Technical Engine Oil Requirements:

The engine oil must be changed when the Total Base Number (TBN) has been reduced to 1.0 mgKOH/g. TBN (mgKOH/g) test method; JIS K-201-5.2-2 (HCl), ASTM D4739 (HCl).

## Engine Oil Viscosity

Select the appropriate engine oil viscosity based on the ambient temperature and use the SAE Service Grade Viscosity Chart in **Figure 3**.

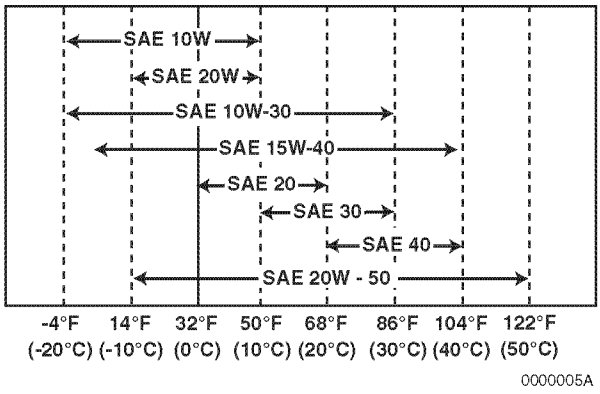


*Figure 3*

## Checking Engine Oil

1. Make sure engine is level.
2. Remove dipstick **(Figure 4, (1))** and wipe with clean cloth.
3. Fully reinsert dipstick.
4. Remove dipstick. The oil level should be between upper **(Figure 4, (2))** and lower **(Figure 4, (3))** lines on the dipstick.
5. Fully reinsert dipstick.

## Adding Engine Oil

1. Make sure engine is level.
2. Remove oil cap **(Figure 4, (4))**.
3. Add indicated amount of engine oil at the top or side engine oil filler port **(Figure 4, (5))**.
4. Wait three minutes and check oil level.
5. Add more oil if necessary.
6. Reinstall oil cap **(Figure 4, (4))** and hand-tighten. Over-tightening may damage the cap.

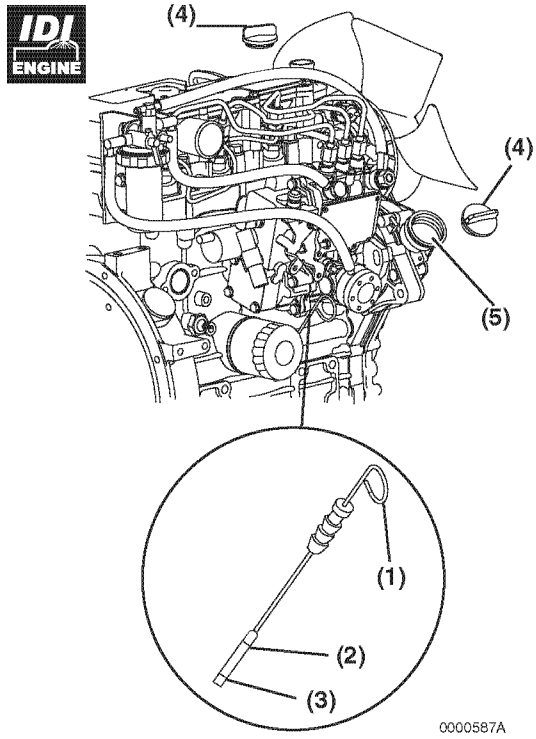

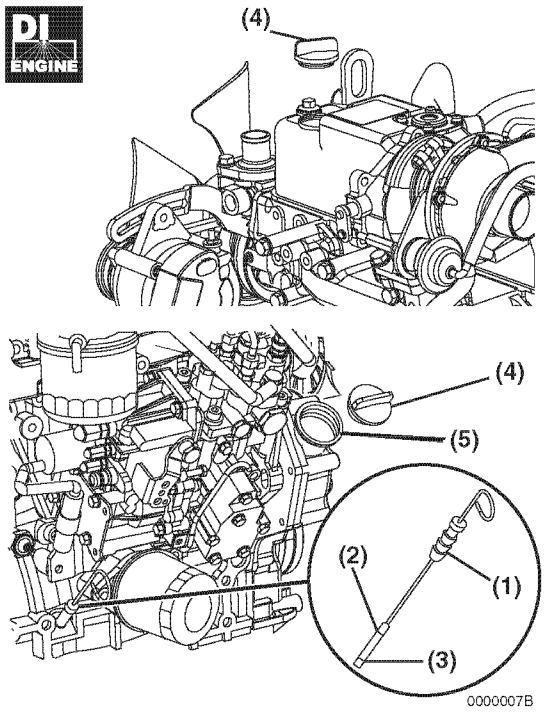


*Figure 4*

## Engine Oil Capacity (Typical)

Note: These are the engine oil capacities associated with a “Deep Standard” oil pan. Oil capacity will vary dependent upon which optional oil pan is used. Refer to the operation manual provided by the driven machine manufacturer for the actual engine oil capacity of your machine.

The following are the engine oil capacities for various Yanmar TNV engines.

**Engine Oil Capacity (Typical)**

| Engine Model | Dipstick Upper Limit/ Lower Limit |
|---|---|
| 2TNV70(VM)<br>2TNV70(VH) | 1.9 / 1.3 qt<br>(1.8 / 1.2 L) |
| 2TNV70(CH) | 2.3 / 1.3 qt<br>(2.2 / 1.2 L) |

**Engine Oil Capacity (Typical)**

| Engine Model | Dipstick Upper Limit/ Lower Limit |
|---|---|
| 3TNV70(CL),<br>3TNV70(VM)<br>3TNV70(VH) | 3.0 / 1.6 qt<br>(2.8 / 1.5 L) |
| 3TNV70(CH) | 4.0 / 2.2 qt<br>(3.8 / 2.1 L) |
| 3TNV76(CL),<br>3TNV76(VM)<br>3TNV76(VH) | 3.6 / 1.9 qt<br>(3.4 / 1.8 L) |
| 3TNV76(CH) | 4.7 / 2.4 qt<br>(4.4 / 2.3 L) |

**Engine Oil Capacity (Typical)**

| Engine Model | Dipstick Upper Limit / Lower Limit |
|---|---|
| 3TNV82A | 5.8 / 3.8 qt<br>(5.5 / 3.6 L) |
| 3TNV84, 3TNV84T | 7.1 / 4.1 qt<br>(6.7 / 3.9 L) |
| 3TNV88 | 7.1 / 4.1 qt<br>(6.7 / 3.9 L) |
| 4TNV84, 4TNV84T | 7.8 / 4.2 qt<br>(7.4 / 4.0 L) |
| 4TNV88 | 7.8 / 4.2 qt<br>(7.4 / 4.0 L) |
| 4TNV94L | 11.1 / 6.3 qt<br>(10.5 / 6.0 L) |
| 4TNV98, 4TNV98T | 11.1 / 6.3 qt<br>(10.5 / 6.0 L) |
| 4TNV106(CL),<br>4TNV106T(CL) | 14.8 / 5.3 qt<br>(14.0 / 5.0 L) |
| 4TNV106(VM),<br>4TNV106T(VM) | 14.8 / 6.9 qt<br>(14.0 / 6.5 L) |

# ENGINE COOLANT

**⚠ DANGER**

**SCALD HAZARD!**

- NEVER remove the radiator cap if the engine is hot. Steam and hot engine coolant will spurt out and seriously burn you. Allow the engine to cool down before you attempt to remove the radiator cap.
- Tighten the radiator cap securely after you check the radiator. Steam can spurt out during engine operation if the cap is loose.
- ALWAYS check the level of the engine coolant by observing the reserve tank.
- Failure to comply will result in death or serious injury.

0000002en

**⚠ WARNING**

**BURN HAZARD!**

- Wait until the engine cools before you drain the engine coolant. Hot engine coolant may splash and burn you.
- Failure to comply could result in death or serious injury.

0000016en

**CAUTION**

- Only use the engine oil specified. Other engine oils may affect warranty coverage, cause internal engine components to seize and / or shorten engine life.
- Prevent dirt and debris from contaminating the engine oil. Carefully clean the oil cap / dipstick and the surrounding area before you remove the cap.
- NEVER mix different types of engine oil. This may adversely affect the lubricating properties of the engine oil.
- NEVER overfill. Overfilling may result in white exhaust smoke, engine overspeed or internal damage.

0000005en

**CAUTION**

- Only use the engine coolant specified. Other engine coolants may affect warranty coverage, cause an internal buildup of rust and scale and / or shorten engine life.
- Prevent dirt and debris from contaminating the engine coolant. Carefully clean the radiator cap and the surrounding area before you remove the cap.
- NEVER mix different types of engine coolants. This may adversely affect the properties of the engine coolant.

0000006en

## Engine Coolant Specifications

Use a Long Life Coolant (LLC) or an Extended Life Coolant (ELC) that meets or exceeds the following guidelines and specifications.

### Alternative Engine Coolant

If an Extended or Long Life Coolant is not available, alternatively, you may use an ethylene glycol or propylene glycol based conventional coolant (green).

Notes:

1. ALWAYS use a mix of coolant and water. NEVER use water only.
2. Mix coolant and water per the mixing instructions on the coolant container.
3. Water quality is important to coolant performance. Yanmar recommends that soft, distilled or demineralized water be used to mix with coolants.
4. NEVER mix extended or long life coolants and conventional (green) coolants.
5. NEVER mix different types and / or colors of extended life coolants.
6. Replace the coolant every 1000 engine hours or once a year.

### Additional Technical Coolant Specifications:

- ASTM D6210, D4985 (US)
- JIS K-2234 (Japan)
- SAE J814C, J1941, J1034 or J2036 (International)

## Filling Radiator With Engine Coolant

Fill the radiator and reserve tank as follows. This procedure is for filling the radiator for the first time or refilling it after it is flushed. Note that a typical radiator is illustrated.

1. Check to be sure the radiator drain plug is installed and tightened or the drain cock **(Figure 5, (1))** is closed. Also make sure the coolant drain plug **(Figure 6, (1))** in the cylinder block is closed and the coolant hoses **(Figure 7, (1))** are installed at the oil cooler.

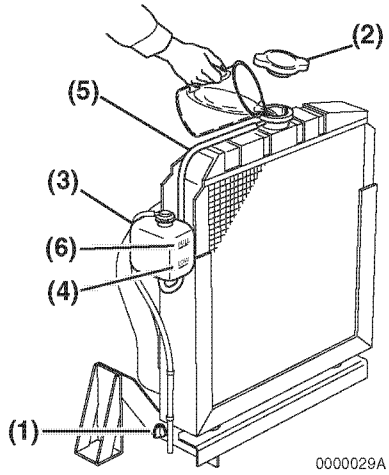


*Figure 5*

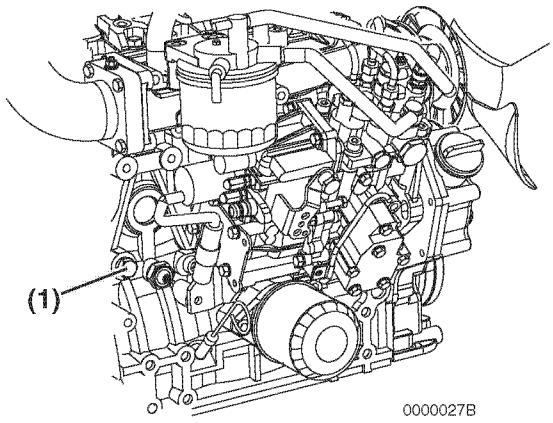


*Figure 6*

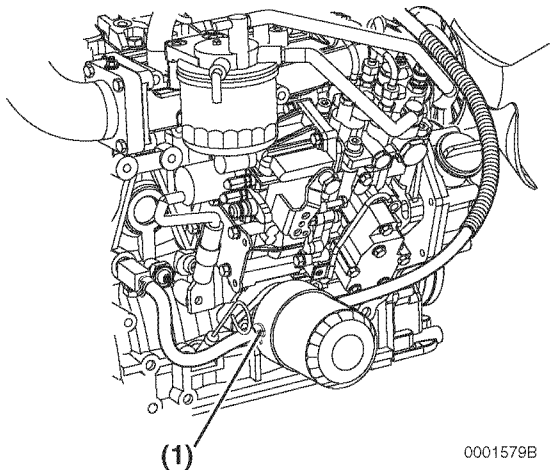


*Figure 7*

2. Remove the radiator cap **(Figure 5, (2))** by turning it counterclockwise about 1/3 of a turn.
3. Pour the engine coolant *slowly* into the radiator until it is even with the lip of the engine coolant filler port. Make sure that air bubbles do not develop as you fill the radiator.
4. Reinstall the radiator cap **(Figure 5, (2))**. Align the tabs on the back side of the radiator cap with the notches on the engine coolant filler port. Press down and turn the cap clockwise about 1/3 of a turn.
5. Remove the cap of the reserve tank **(Figure 5, (3))**, and fill it to the LOW (COLD) mark **(Figure 5, (4))** with engine coolant. Reinstall the cap.
6. Check the hose **(Figure 5, (5))** that connects the reserve tank **(Figure 5, (3))** to the radiator. Be sure it is securely connected and there are no cracks or damage. If the hose is damaged, engine coolant will leak out instead of going into the reserve tank.
7. Run the engine until it reaches operating temperature. Check the level of engine coolant in the reserve tank When the engine is running and the engine coolant is at normal temperature, the coolant level in the reserve tank should be at or neat the FULL (HOT) mark **(Figure 5, (6))**. If the coolant is not at the FULL (HOT) mark, add coolant to the reserve tank to bring the coolant level to the FULL (HOT) mark.

## Daily Check of the Cooling System

1. Check the level of engine coolant in the reserve tank. When the engine is cold, the coolant level in the tank should be at or slightly above the LOW (COLD) mark **(Figure 5, (4))** on the coolant reserve tank.

   If the coolant level is at the FULL (HOT) mark **(Figure 5, (6))** when the engine is cold, the coolant will expand when it becomes hot and possibly spray out of the overflow hose.
2. Add additional engine coolant to the reserve tank if necessary.
3. Check the radiator hoses for cracks, abrasions, cuts or other damage. Replace as necessary.

## Engine Coolant Capacity (Typical)

Note: Capacities listed are for the engine only without a radiator. Refer to the operation manual provided by the driven machine manufacturer for actual engine coolant capacity on your machine.

The following are the engine coolant capacities for various Yanmar TNV engines.

**Engine Coolant Capacity (Typical)**

| Engine Model | Engine Coolant Capacity |
|---|---|
| 2TNV70 | 0.6 qt (0.6 L) |
| 3TNV70 | 1.0 qt (0.9 L) |
| 3TNV76 | 1.0 qt (0.9 L) |

| DI ENGINE Engine Coolant Capacity (Typical) | |
|---|---|
| **Engine Model** | **Engine Coolant Capacity** |
| 3TNV82A | 1.9 qt (1.8 L) |
| 3TNV84, 3TNV84T | 2.1 qt (2.0 L) |
| 3TNV88 | 2.1 qt (2.0 L) |
| 4TNV84, 4TNV84T | 2.9 qt (2.7 L) |
| 4TNV88 | 2.9 qt (2.7 L) |
| 4TNV94L | 4.4 qt (4.2 L) |
| 4TNV98, 4TNV98T | 4.4 qt (4.2 L) |
| 4TNV106, 4TNV106T | 6.3 qt (6.0 L) |

# DAILY CHECKS

Before you begin any job, make sure the Yanmar TNV engine is in good operating condition. Make sure you check the following items before you start your shift and have any repairs completed before you start work.

**⚠ WARNING**

**HIGH-PRESSURE HAZARD!**

- **Avoid skin contact with the high-pressure diesel fuel spray caused by a fuel system leak such as a broken fuel injection line. High-pressure fuel can penetrate your skin and result in serious injury. If you are exposed to high-pressure fuel spray, obtain prompt medical treatment.**
- **NEVER check for a fuel leak with your hands. ALWAYS use a piece of wood or cardboard. Have your authorized Yanmar industrial engine dealer or distributor repair the damage.**
- **Failure to comply could result in death or serious injury.**

0000008en

**CAUTION**

**Make it a habit to perform daily checks. *See Daily Checks in the Before You Operate Section of this manual.***

**Periodic maintenance prevents unexpected downtime, reduces the number of accidents due to poor machine performance and helps extend the life of the engine.**

0000060enTNVIDI-DIOM

## Visual Checks

1. Check for engine oil leaks.
2. Check for fuel leaks.
3. Check for engine coolant leaks.
4. Check for damaged or missing parts.
5. Check for loose, missing or damaged fasteners.
6. Check the electrical harnesses for cracks, abrasions, and damaged or corroded connectors.
7. Check hoses for cracks, abrasions, and damaged, loose or corroded clamps.
8. Check and clean radiator fins as necessary. *See Check and Clean Radiator Fins on page 99.*
9. Check the fuel filter / water separator for presence of water and contaminants. If you find any water or contaminants, drain the fuel filter / water separator. *See Drain Fuel Filter / Separator on page 94.* If you have to drain the fuel filter / water separator frequently, drain the fuel tank and check for the presence of water in your fuel supply. *See Drain Fuel Tank on page 97.*

**CAUTION**

**If any problem is noted during the visual check, the necessary corrective action should be taken before you operate the engine.**

0000021en

## Check Diesel Fuel, Engine Oil and Engine Coolant Levels

Follow the procedures in *Diesel Fuel on page 44*, *Engine Oil on page 49* and *Engine Coolant on page 52* to check these levels.

## Check Engine Speed Control

1. Check the engine speed control for smooth operation, adjust and lubricate or clean as necessary. *See Check and Adjust the Governor Lever and Engine Speed Control (Except Electronically Controlled Engines) on page 100.*

## Check Operator's Console

Before you operate the engine you should make sure that all of the indicators are functioning properly.

## Check Indicators

Yanmar TNV engines are available with various operator's consoles. Two typical operator's consoles are shown **(Figure 8)** or **(Figure 9)**.

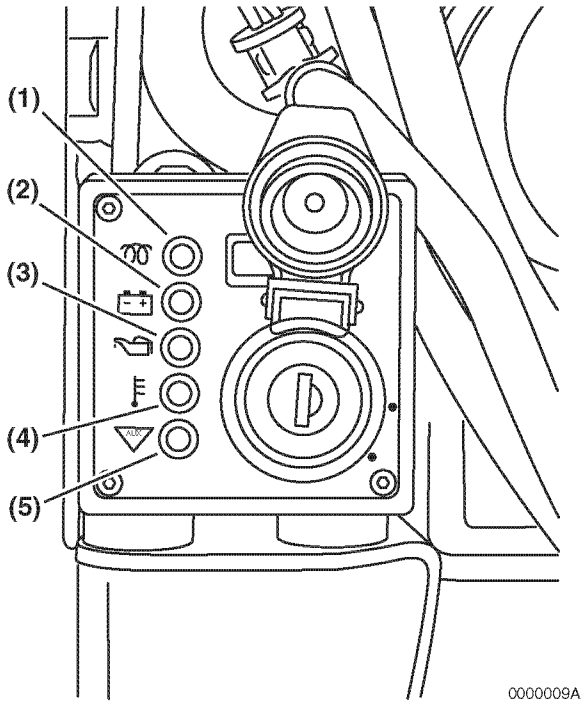


***Figure 8***

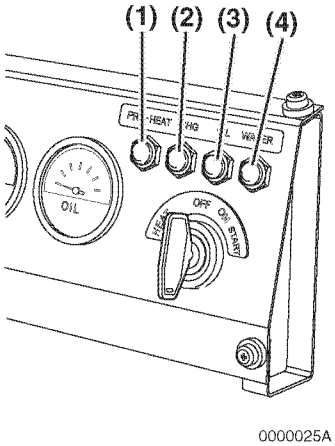


***Figure 9***

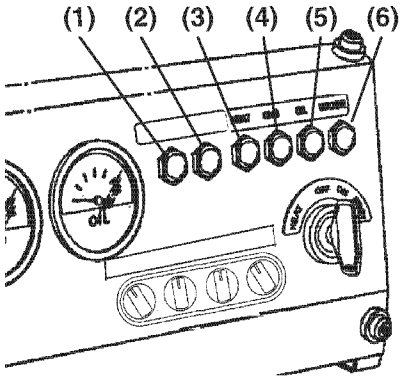


DI ENGINE **4TNV84T-Z,4TNV98-E, 4TNV98-Z,4TNV98T-Z**

*Figure 10*

**HEAT (Figure 8, (1))** or **(Figure 9, (1))** or **(Figure 10, (1))** - **Figure 9** shows a typical indicator arrangement on the operator's console. When the key switch is turned to the HEAT position, the HEAT indicator comes on indicating the glow plugs or air heater are/is energized, and stays on for 4 sec. for IDI models with glow plugs or 15 sec. for DI models with glow plugs or air heater. When it goes out, turn the key switch to the START position to start the engine.

**Figure 8** shows a typical operator's console having the optional key switch. When the optional key switch is turned to the ON position, the indicator comes on indicating the glow plugs or air heater are/is energized, and stays on for 4 sec. for IDI models with glow plugs or 15 sec. for DI models with glow plugs or air heater. When it goes out, turn the key switch to the START position to start the engine.

**Figure 10** shows a typical indicator arrangement on the operator's console of electronically controlled engines. The key switch on the console is available in two types: standard and optional. While the standard type has the HEAT position, the optional type omits the HEAT position and has the ON-glow/ON-air heat capability. Consult the operation manual for the driven machine for the applicability of the key switch types.

The following lists the engine models with glow plugs and those with air heater for your reference.

**Models with glow plugs:**
2TNV70,3TNV70,3TNV76,3TNV82A-B
3TNV88-B,3TNV88-U,4TNV88-B,
4TNV88-U

**Models with air heater:**
3TNV82A,3TNV84,3TNV84T,3TNV88
4TNV84,4TNV88
4TNV84T-Z,4TNV98-E,4TNV98-Z,
4TNV98T-Z,Tier2 DI Engine

**Battery Charge (Figure 8, (2))** or **(Figure 9, (2))** or **(Figure 10, (4))** - Stays on until the engine is running and the alternator is supplying charging current. This indicator does not indicate whether the battery is discharged.

**Engine Oil Pressure (Figure 8, (3))** or **(Figure 9, (3))** or **(Figure 10, (5))** - Stays on until the engine is running and the oil pressure is within normal limits.

**Engine Coolant Temperature (Figure 8, (4))** or **(Figure 9, (4))** or **(Figure 10, (6))** - Stays on momentarily. Comes back on if engine overheats.

**Auxiliary (Figure 8, (5))** or **(Figure 10, (2))** - Stays on momentarily. Used for special applications.

Here is a summary of how these indicators function. The table shows what happens when you turn the key in a certain direction (e.g., OFF to ON).

**Fault indicator (Figure 10, (1)) (optional)** - Illuminates for approx. 2 sec. when the key switch is turned to ON, and stays off while the engine is running. If a fault occurs in the Eco-governor system or during energization of the E-ECU, this indicator will flash in a certain pattern to indicate what fault has occurred. See the troubleshooting section for details.

| Indicator | | | OFF to HEAT | OFF to ON | ON to OFF |
|---|---|---|---|---|---|
| HEAT<br>**Figure 8,(1)**<br>**Figure 9, (1)**<br>**Figure 10, (3)** | ON-glow ON-air heat Type | glow | NA | Lights for several seconds (IDI = 4 sec., DI = 15 sec.) then goes out.Lights for 1 - 15 sec. for electronically controlled engines depending on the coolant temperature. | OFF |
| | | air heat | | Lights for several 15 seconds then goes out.Lights for 1 - 23 sec. for electronically controlled engines depending on the coolant temperature. | OFF |
| | HEAT position available on key switch | glow | Lights for several seconds (IDI = 4 sec., DI = 15 sec.) then goes out. | OFF | OFF |
| | | air heat | Lights for several 15 seconds then goes out. | OFF | OFF |
| Battery Charge<br>**Figure 8,(2)**<br>**Figure 9, (2)**<br>**Figure 10, (4)** | | | NA | ON | OFF (Stays on until alternator is supplying charging current. Remains on if there is a problem in the charging system. This indicator does not indicate whether the battery is discharged.) |
| Engine Oil Pressure<br>**Figure 8,(3)**<br>**Figure 9, (3)**<br>**Figure 10, (5)** | | | NA | ON | OFF (Stays on until oil pressure reaches normal operating pressure. Remains on, or comes back on, if there is a problem in the lubrication system.) |
| Engine Coolant Temperature<br>**Figure 8,(4)**<br>**Figure 9, (4)**<br>**Figure 10, (6)** | | | NA | ON | OFF (Stays on momentarily. Comes back on if there is a problem in the cooling system.) |
| Auxiliary<br>**Figure 8,(5)**<br>**Figure 10, (2)** | | | NA | ON | OFF |
| Fault (optional)<br>**Figure 10, (1)**<br>3TNV84T-Z, 4TNV84T-Z, 4TNV98-E, 4TNV98-Z, 4TNV98T-Z | | | NA | Lights for 2 sec. only. | OFF (Flashes or intermittently lights if a fault occurs in the E-ECU or Eco-governor.) |

# ENGINE OPERATION

This section of the *Operation Manual* describes the procedures for starting the engine, checking engine performance during operation, and shutting the engine down.

**CAUTION**

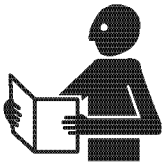

**NEVER permit anyone to operate the engine or driven machine without proper training.**

- **Read and understand this Operation Manual before you operate or service the machine to ensure that you follow safe operating practices and maintenance procedures.**
- **Machine safety signs and labels are additional reminders for safe operating and maintenance techniques.**
- **See your authorized Yanmar industrial engine dealer or distributor for additional training.**

0000002en

**⚠ DANGER**

**SCALD HAZARD!**

- **NEVER remove the radiator cap if the engine is hot. Steam and hot engine coolant will spurt out and seriously burn you. Allow the engine to cool down before you attempt to remove the radiator cap.**
- **Tighten the radiator cap securely after you check the radiator. Steam can spurt out during engine operation if the cap is loose.**
- **ALWAYS check the level of the engine coolant by observing the reserve tank.**
- **Failure to comply will result in death or serious injury.**

0000002en

**⚠ DANGER**

**EXPLOSION HAZARD!**

- Keep the area around the battery well-ventilated. While the engine is running or the battery is charging, hydrogen gas is produced which can be easily ignited.
- Keep sparks, open flame and any other form of ignition away while the engine is running or battery is charging.
- Failure to comply will result in death or serious injury.

0000003en

**⚠ DANGER**

**FIRE AND EXPLOSION HAZARD!**

- Only use the key switch to start the engine.
- NEVER jump-start the engine. Sparks caused by shorting the battery to the starter terminals may cause a fire or explosion.
- Failure to comply will result in death or serious injury.

0000004en

**⚠ DANGER**

**FIRE AND EXPLOSION HAZARD!**

- Diesel fuel is flammable and explosive under certain conditions.
- NEVER remove the fuel cap with the engine running.
- Failure to comply will result in death or serious injury.

0000011en

**⚠ DANGER**

**FIRE AND EXPLOSION HAZARD!**

- Diesel fuel is flammable and explosive under certain conditions.
- Only fill the fuel tank with diesel fuel. Filling the fuel tank with gasoline may result in a fire and will damage the engine.
- NEVER refuel with the engine running.
- Wipe up all spills immediately.
- Keep sparks, open flames or any other form of ignition (match, cigarette, static electric source) well away when refueling.
- NEVER overfill the fuel tank.
- Fill the fuel tank. Store any containers containing fuel in a well-ventilated area, away from any combustibles or sources of ignition.
- Failure to comply will result in death or serious injury.

0000005en

**⚠ DANGER**

**FIRE AND EXPLOSION HAZARD!**

- Diesel fuel is flammable and explosive under certain conditions.
- Be sure to place the diesel fuel container on the ground when transferring the diesel fuel from the pump to the container. Hold the hose nozzle firmly against the side of the container while filling it. This prevents static electricity buildup which could cause sparks and ignite fuel vapors.
- NEVER place diesel fuel or other flammable material such as oil, hay or dried grass close to the engine during engine operation or shortly after shutdown.
- Failure to comply will result in death or serious injury.

0000014en

**⚠ DANGER**

**FIRE AND EXPLOSION HAZARD!**

- Diesel fuel is flammable and explosive under certain conditions.
- Before you operate the engine, check for fuel leaks. Replace rubberized fuel hoses every two years or every 2000 hours of engine operation, whichever comes first, even if the engine has been out of service. Rubberized fuel lines tend to dry out and become brittle after two years or 2000 hours of engine operation, whichever comes first.
- Failure to comply will result in death or serious injury.

0000015en

**⚠ WARNING**

**BURN HAZARD!**

- Keep your hands and other body parts away from hot engine surfaces such as the muffler, exhaust pipe, turbocharger (if equipped) and engine block during operation and shortly after you shut the engine down. These surfaces are extremely hot while the engine is operating and could seriously burn you.
- Failure to comply could result in death or serious injury.

0000015en

**⚠ WARNING**

**SEVER HAZARD!**

- Keep hands and other body parts away from moving / rotating parts such as the cooling fan, flywheel or PTO shaft.
- Wear tight-fitting clothing and keep your hair short or tie it back while the engine is running.
- Remove all jewelry before you operate or service the machine.
- NEVER start the engine in gear. Sudden movement of the engine and / or machine could cause death or serious personal injury.
- NEVER operate the engine without the guards in place.
- Before you start the engine make sure that all bystanders are clear of the area.
- Keep children and pets away while the engine is operating.
- Check before starting the engine that any tools or shop rags used during maintenance have been removed from the area.
- Failure to comply could result in death or serious injury.

0000002en

**⚠ WARNING**

**EXHAUST HAZARD!**

- NEVER operate the engine in an enclosed area such as a garage, tunnel, underground room, manhole or ship's hold without proper ventilation.
- NEVER block windows, vents, or other means of ventilation if the engine is operating in an enclosed area. All internal combustion engines create carbon monoxide gas during operation. Accumulation of this gas within an enclosure could cause illness or even death.
- Make sure that all connections are tightened to specifications after repair is made to the exhaust system.
- Failure to comply could result in death or serious injury.

0000003en

**⚠ WARNING**

**ALCOHOL AND DRUG HAZARD!**

- NEVER operate the engine while you are under the influence of alcohol or drugs.
- NEVER operate the engine when you are feeling ill.
- Failure to comply could result in death or serious injury.

0000004en

## ⚠ WARNING

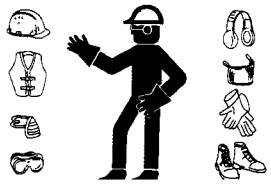

**EXPOSURE HAZARD!**

- Wear personal protective equipment such as gloves, work shoes, eye and hearing protection as required by the task at hand.
- NEVER wear jewelry, unbuttoned cuffs, ties or loose-fitting clothing when you are working near moving / rotating parts such as the cooling fan, flywheel or PTO shaft.
- ALWAYS tie back long hair when you are working near moving / rotating parts such as a cooling fan, flywheel, or PTO shaft.
- NEVER operate the engine while wearing a headset to listen to music or radio because it will be difficult to hear the alert signals.
- Failure to comply could result in death or serious injury.

0000005en

## ⚠ WARNING

**SUDDEN MOVEMENT HAZARD!**

- Engaging the transmission or PTO at an elevated engine speed could result in unexpected movement of the equipment.
- Failure to comply could result in death or serious injury.

0000006en

## CAUTION

NEVER use an engine starting aid such as ether. Engine damage will result.

0000009en

## CAUTION

For maximum engine life, Yanmar recommends that when shutting the engine down, you allow the engine to idle, without load, for five minutes. This will allow the engine components that operate at high temperatures, such as the turbocharger (if equipped) and exhaust system, to cool slightly before the engine itself is shut down.

0000008en

## CAUTION

Make sure the engine is installed on a level surface. If a continuously running engine is installed at an angle greater than (IDI = 25°, DI = 30°) in any direction or if an engine runs for short periods of time (less than three minutes) at an angle greater than (IDI = 30°, DI = 35°) in any direction, engine oil may enter the combustion chamber causing excessive engine speed and white exhaust smoke. This may cause serious engine damage.

0000010enTNV

**CAUTION**

New Engine Break-in:

- On the initial engine start-up, allow the engine to idle for approximately 15 minutes while you check for proper engine oil pressure, diesel fuel leaks, engine oil leaks, coolant leaks, and for proper operation of the indicators and / or gauges.
- During the first hour of operation, vary the engine speed and the load on the engine. Short periods of maximum engine speed and load are desirable. Avoid prolonged operation at minimum or maximum engine speeds and loads for the next four to five hours.
- During the break-in period, carefully observe the engine oil pressure and engine temperature.
- During the break-in period, check the engine oil and coolant levels frequently.

0000011en

**CAUTION**

NEVER hold the key in the START position for longer than 15 seconds or the starter motor will overheat.

0000007en

**CAUTION**

NEVER engage the starter motor while the engine is running. This may damage the starter motor pinion and / or ring gear.

0000012en

**CAUTION**

Observe the following environmental operating conditions to maintain engine performance and avoid premature engine wear:

- Avoid operating in extremely dusty conditions.
- Avoid operating in the presence of chemical gases or fumes.
- Avoid operating in a corrosive atmosphere such as salt water spray.
- NEVER install the engine in a floodplain unless proper precautions are taken to avoid being subject to a flood.
- NEVER expose the engine to the rain.

0000003en

**CAUTION**

Observe the following environmental operating conditions to maintain engine performance and avoid premature engine wear:

- The standard range of ambient temperatures for the normal operation of Yanmar engines is from +5°F (-15°C) to +113°F (+45°C).
- If the ambient temperature exceeds +113°F (+45°C) the engine may overheat and cause the engine oil to break down.
- If the ambient temperature is below +5°F (-15°C) the engine will be hard to start and the engine oil may not flow easily.
- Contact your authorized Yanmar industrial engine dealer or distributor if the engine will be operated outside of this standard temperature range.

0000065en

# STARTING ENGINE

Use the following procedure to start the engine. Note that two typical operator's consoles are shown for illustrative purposes only.

1. Make sure you follow the procedures stated in the *Daily Checks on page 55*.
2. Before first starting electronically controlled engines 4TNV84T-Z, 4TNV98-E, 4TNV98-Z, 4TNV98T-Z: The E-ECU of the electronically controlled engines shown above needs to be initialized at initial power up. When the fault indicator comes on at initial power up, the E-ECU has finished initialization. Then always turn the key switch to the OFF position once before starting the engine. (The E-ECU has usually been initialized before the driven machine is delivered).
   From the second power up, make sure the fault indicator is on for 2 sec. when turning the key switch to the ON position.
3. Make sure the fuel filter / water separator fuel cock **(Figure 1, (1))** is in the ON position **(Figure 1, (2))**.

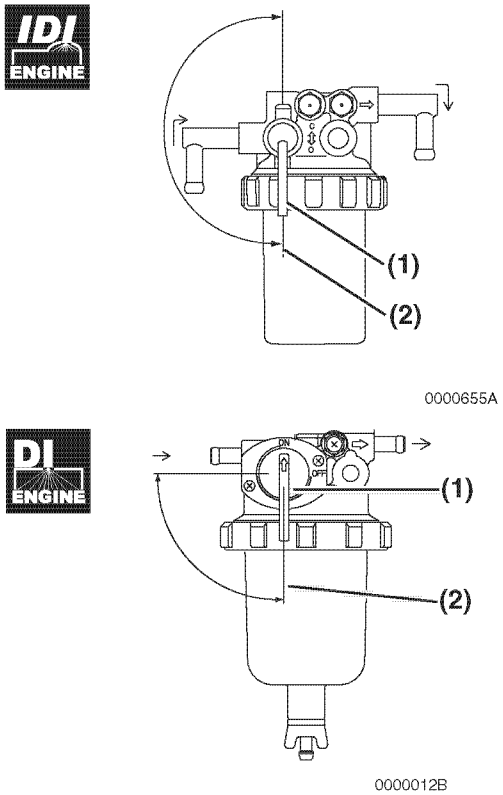


*Figure 1*

4. Set the transmission (if equipped) in the NEUTRAL position.
5. Disengage the PTO (if equipped).
6. Set the engine speed control to the mid-position.

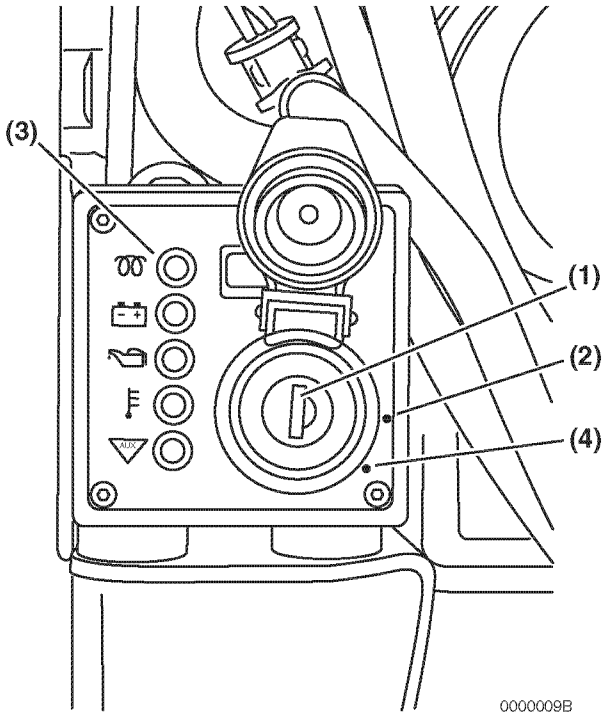


*Figure 2*

**CAUTION**

**NEVER use an engine starting aid such as ether. Engine damage will result.**

0000009en

7. Insert the key into the key switch **(Figure 2, (1))** or **(Figure 3, (1))**.

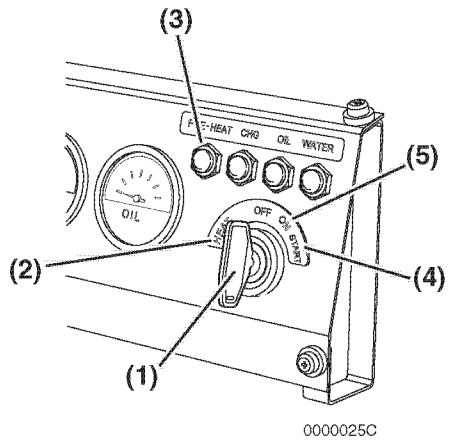


*Figure 3*

8. Turn the key to the ON position **(Figure 2, (2))** or the HEAT position **(Figure 3, (2))**. The pre-heat indicator **(Figure 2, (3))** flashes for several seconds and then goes out. After the pre-heat indicator goes out you can start the engine.

Note: The glow plugs, and the air heater, are used to assist starting in cold weather conditions. If you are operating your engine in normal or warm weather conditions, you may bypass the Pre-Heat / Heat functions and go directly to Start.

**CAUTION**

**NEVER hold the key in the START position for longer than 15 seconds or the starter motor will overheat.**

0000007en

9. Turn the key clockwise to the START position **(Figure 2, (4))** or **(Figure 3, (4))**. Release the key as soon as the engine starts. It will return to the ON position **(Figure 2, (2))** or **(Figure 3, (5))**.

Note: The starter of electronically controlled engines 4TNV84T-Z, 4TNV98-E, 4TNV98-Z, 4TNV98T-Z will start with a delay of approx. 0.5 sec. after the key switch has been turned to the ON position. This is because the E-ECU self-diagnostics has run and is not a failure.

10. If the engine fails to start:

(a) Wait until the engine comes to a complete stop before you attempt to start it again. Engaging the starter while the engine is still rotating will result in damage to the starter and flywheel.

Note: Some key switches are equipped with an interlock that will not allow you to re-engage the starter without first turning the key to the OFF position.

(b) Wait at least 30 seconds before you attempt to start the engine again. This procedure will allow the battery voltage to recover and prevent damage to the starter motor due to the low battery voltage.

## COLD START DEVICE

**⚠ WARNING**

**SUDDEN MOVEMENT HAZARD!**

- **Engaging the transmission or PTO at an elevated engine speed could result in unexpected movement of the equipment.**
- **Failure to comply could result in death or serious injury.**

0000006en

The cold start device on direct injection models improves engine starting at lower temperatures.

- If the engine cooling system temperature is below 41°F (5°C), the cold start device automatically advances the fuel injection timing and slightly increases the fuel injection volume.
- The engine idle speed will be slightly elevated for approximately the first 5 minutes of operation.
- When the cold start device is activated, you may notice a slight increase in the amount of exhaust smoke. This is normal.
- NEVER engage the transmission or PTO while the cold start device is activated or unexpected movement of the machine may result.

## CHECKING THE ENGINE DURING OPERATION

**CAUTION**

**Make sure the engine is installed on a level surface. If a continuously running engine is installed at an angle greater than (IDI = 25°, DI = 30°) in any direction or if an engine runs for short periods of time (less than three minutes) at an angle greater than (IDI = 30°, DI = 35°) in any direction, engine oil may enter the combustion chamber causing excessive engine speed and white exhaust smoke. This may cause serious engine damage.**

0000010enTNV

**CAUTION**

**New Engine Break-in:**

- **On the initial engine start-up, allow the engine to idle for approximately 15 minutes while you check for proper engine oil pressure, diesel fuel leaks, engine oil leaks, coolant leaks, and for proper operation of the indicators and / or gauges.**
- **During the first hour of operation, vary the engine speed and the load on the engine. Short periods of maximum engine speed and load are desirable. Avoid prolonged operation at minimum or maximum engine speeds and loads for the next four to five hours.**
- **During the break-in period, carefully observe the engine oil pressure and engine temperature.**
- **During the break-in period, check the engine oil and coolant levels frequently.**

0000011en

**CAUTION**

**NEVER engage the starter motor while the engine is running. This may damage the starter motor pinion and / or ring gear.**

0000012en

1. While the engine is running, check the gauges for normal indications. The gauges shown in **Figure 5** and **Figure 4** are provided for illustrative purposes only.

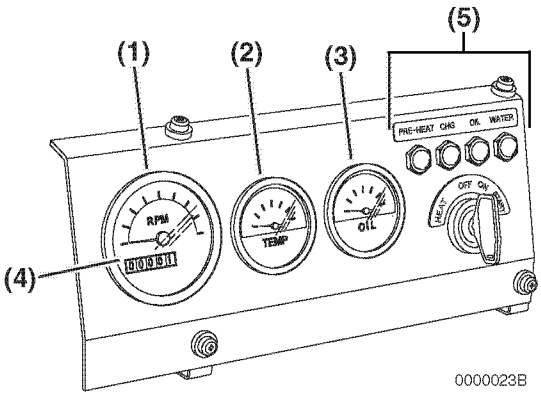


*Figure 4*

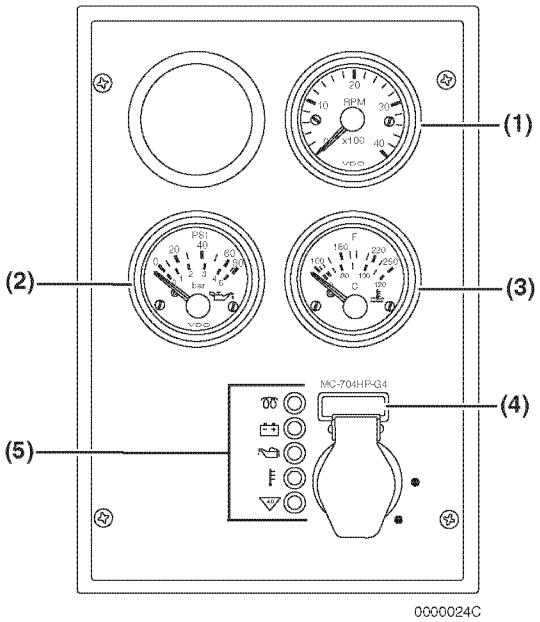


*Figure 5*

- **Tachometer (Figure 5, (1))** or **(Figure 4, (1))** -Make sure the engine speed is within normal limits. *See Engine Speed Specifications on page 128.*
- **Engine Oil Pressure (Figure 5, (2))** or **(Figure 4, (3))** - Make sure the engine oil pressure is within normal limits. *See Principal Engine Specifications on page 129.*
- **Engine Coolant Temperature (Figure 5, (3))** or **(Figure 4, (2))** - Make sure the engine coolant temperature is within normal limits.
- **Hour Meter** - The hour meter display **(Figure 5, (4))** or **(Figure 4, (4))** shows the total number of hours the engine has run. This is useful for planning periodic maintenance operations. *See Periodic Maintenance Schedule on page 85.*
- If any of the gauges shows an out of normal limits condition, shut down the engine and have the necessary repairs performed.

2. After the engine has reached operating temperature, all of the indicators **(Figure 5, (5))** or **(Figure 4, (5))** should be off. If any of the indicators are on, shut down the engine and have the necessary repairs performed.
3. Check for white or black smoke from the exhaust system. A small amount of white exhaust smoke is normal on start-up of a cold engine. Black exhaust smoke could mean the engine is overloaded or is being over-fueled. If either of these conditions persists, contact your authorized Yanmar industrial engine dealer or distributor.
4. Check for abnormal sounds or vibration. In some applications the engine and its mounting may start to resonate and cause unusual vibrations at certain engine speeds. Avoid running the engine at these speeds. If the abnormal sounds or vibration cannot be resolved, shut down the engine and have the necessary repairs performed. Contact your authorized Yanmar industrial engine dealer or distributor.

**⚠ WARNING**

**HIGH-PRESSURE HAZARD!**

- **Avoid skin contact with the high-pressure diesel fuel spray caused by a fuel system leak such as a broken fuel injection line. High-pressure fuel can penetrate your skin and result in serious injury. If you are exposed to high-pressure fuel spray, obtain prompt medical treatment.**
- **NEVER check for a fuel leak with your hands. ALWAYS use a piece of wood or cardboard. Have your authorized Yanmar industrial engine dealer or distributor repair the damage.**
- **Failure to comply could result in death or serious injury.**

0000008en

5. Check for any fuel, engine coolant or engine oil leaks. If any leaks are found shut down the engine and have the necessary repairs performed.
6. Check the fuel level during operation. If the fuel level runs low, stop the engine and refuel.

# ADJUST ENGINE SPEED

**CAUTION**

**New Engine Break-in:**

- **On the initial engine start-up, allow the engine to idle for approximately 15 minutes while you check for proper engine oil pressure, diesel fuel leaks, engine oil leaks, coolant leaks, and for proper operation of the indicators and / or gauges.**
- **During the first hour of operation, vary the engine speed and the load on the engine. Short periods of maximum engine speed and load are desirable. Avoid prolonged operation at minimum or maximum engine speeds and loads for the next four to five hours.**
- **During the break-in period, carefully observe the engine oil pressure and engine temperature.**
- **During the break-in period, check the engine oil and coolant levels frequently.**

0000011en

Use the engine speed control to adjust the engine speed for the task that will be performed.

# SHUTTING DOWN THE ENGINE

**CAUTION**

**For maximum engine life, Yanmar recommends that when shutting the engine down, you allow the engine to idle, without load, for five minutes. This will allow the engine components that operate at high temperatures, such as the turbocharger (if equipped) and exhaust system, to cool slightly before the engine itself is shut down.**

0000008en

Follow these steps to shut down the engine:

1. Disengage the PTO and / or set the transmission to NEUTRAL (if equipped).
2. Set the engine speed control to its lowest setting.
3. Run the engine at low idle speed for at least five minutes before you shut it down.

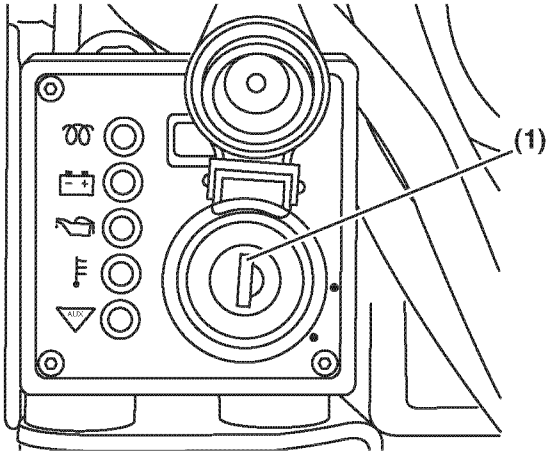


***Figure 6***

4. Turn the key to the OFF position **(Figure 6, (1))** or **(Figure 7, (1))** and remove it from the key switch.

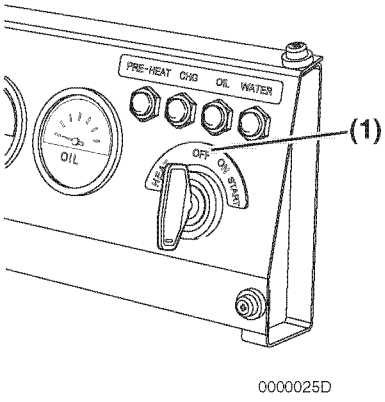


***Figure 7***

5. If the engine will not be used for six months or longer, follow the additional instructions in *Long-Term Storage on page 125*.

# PERIODIC MAINTENANCE

This section of the *Operation Manual* describes the procedures for proper care and maintenance of the engine.

**CAUTION**

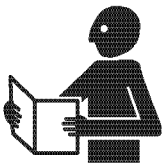

**NEVER permit anyone to operate the engine or driven machine without proper training.**

- **Read and understand this Operation Manual before you operate or service the machine to ensure that you follow safe operating practices and maintenance procedures.**
- **Machine safety signs and labels are additional reminders for safe operating and maintenance techniques.**
- **See your authorized Yanmar industrial engine dealer or distributor for additional training.**

0000002en

**⚠ DANGER**

**EXPLOSION HAZARD!**

- **Never short out the battery terminals, including when checking the remaining battery charge. This will result in a spark and may cause an explosion or fire. Use a hydrometer to check the remaining battery charge.**
- **If the electrolyte is frozen, slowly warm the battery before you recharge it.**
- **Failure to comply will result in death or serious injury.**

0000007en

**⚠ DANGER**

**FIRE AND EXPLOSION HAZARD!**

- **Diesel fuel is flammable and explosive under certain conditions.**
- **NEVER remove the fuel cap with the engine running.**
- **Failure to comply will result in death or serious injury.**

0000011en

**⚠ DANGER**

**FIRE AND EXPLOSION HAZARD!**

- Only use the key switch to start the engine.
- NEVER jump-start the engine. Sparks caused by shorting the battery to the starter terminals may cause a fire or explosion.
- Failure to comply will result in death or serious injury.

0000004en

**⚠ DANGER**

**SCALD HAZARD!**

- NEVER remove the radiator cap if the engine is hot. Steam and hot engine coolant will spurt out and seriously burn you. Allow the engine to cool down before you attempt to remove the radiator cap.
- Tighten the radiator cap securely after you check the radiator. Steam can spurt out during engine operation if the cap is loose.
- ALWAYS check the level of the engine coolant by observing the reserve tank.
- Failure to comply will result in death or serious injury.

0000002en

**⚠ DANGER**

**FIRE AND EXPLOSION HAZARD!**

- Diesel fuel is flammable and explosive under certain conditions.
- Only fill the fuel tank with diesel fuel. Filling the fuel tank with gasoline may result in a fire and will damage the engine.
- NEVER refuel with the engine running.
- Wipe up all spills immediately.
- Keep sparks, open flames or any other form of ignition (match, cigarette, static electric source) well away when refueling.
- NEVER overfill the fuel tank.
- Fill the fuel tank. Store any containers containing fuel in a well-ventilated area, away from any combustibles or sources of ignition.
- Failure to comply will result in death or serious injury.

0000005en

**⚠ DANGER**

**FIRE AND EXPLOSION HAZARD!**

- Diesel fuel is flammable and explosive under certain conditions.
- NEVER use diesel fuel as a cleaning agent.
- Failure to comply will result in death or serious injury.

0000012en

**⚠ DANGER**

**FIRE AND EXPLOSION HAZARD!**

- Diesel fuel is flammable and explosive under certain conditions.
- Be sure to place the diesel fuel container on the ground when transferring the diesel fuel from the pump to the container. Hold the hose nozzle firmly against the side of the container while filling it. This prevents static electricity buildup which could cause sparks and ignite fuel vapors.
- NEVER place diesel fuel or other flammable material such as oil, hay or dried grass close to the engine during engine operation or shortly after shutdown.
- Failure to comply will result in death or serious injury.

0000014en

**⚠ DANGER**

**CRUSH HAZARD!**

- When you need to transport an engine for repair, have a helper assist you to attach it to a hoist and load it on a truck.
- NEVER stand under a hoisted engine. If the hoist mechanism fails, the engine will fall on you, causing death or serious injury.
- Failure to comply will result in death or serious injury.

0000008en

**⚠ DANGER**

**FIRE AND EXPLOSION HAZARD!**

- Diesel fuel is flammable and explosive under certain conditions.
- Before you operate the engine, check for fuel leaks. Replace rubberized fuel hoses every two years or every 2000 hours of engine operation, whichever comes first, even if the engine has been out of service. Rubberized fuel lines tend to dry out and become brittle after two years or 2000 hours of engine operation, whichever comes first.
- Failure to comply will result in death or serious injury.

0000015en

**⚠ DANGER**

**FIRE AND EXPLOSION HAZARD!**

- Diesel fuel is flammable and explosive under certain conditions.
- When you remove any fuel system component to perform maintenance (such as changing the fuel filter) place an approved container under the opening to catch the fuel.
- NEVER use a shop rag to catch the fuel. Vapors from the rag are flammable and explosive.
- Wipe up any spills immediately.
- Wear eye protection. The fuel system is under pressure and fuel could spray out when you remove any fuel system component.
- Failure to comply will result in death or serious injury.

0000009en

**⚠ DANGER**

**FIRE AND EXPLOSION HAZARD!**

- Diesel fuel is flammable and explosive under certain conditions.
- If the unit has an electric fuel pump, when you prime the fuel system, turn the key switch to the ON position for 10 to 15 seconds to allow the electric fuel pump to prime the system.
- If the unit has a mechanical fuel pump, when you prime the fuel system, operate the fuel priming lever of the mechanical fuel pump several times until the fuel filter cup is filled with fuel.
- Failure to comply will result in death or serious injury.

0000010en

**⚠ WARNING**

**EXHAUST HAZARD!**

- NEVER operate the engine in an enclosed area such as a garage, tunnel, underground room, manhole or ship's hold without proper ventilation.
- NEVER block windows, vents, or other means of ventilation if the engine is operating in an enclosed area. All internal combustion engines create carbon monoxide gas during operation. Accumulation of this gas within an enclosure could cause illness or even death.
- Make sure that all connections are tightened to specifications after repair is made to the exhaust system.
- Failure to comply could result in death or serious injury.

0000003en

**⚠ WARNING**

**BURN HAZARD!**

- Keep your hands and other body parts away from hot engine surfaces such as the muffler, exhaust pipe, turbocharger (if equipped) and engine block during operation and shortly after you shut the engine down. These surfaces are extremely hot while the engine is operating and could seriously burn you.
- Failure to comply could result in death or serious injury.

0000015en

**⚠ WARNING**

**SEVER HAZARD!**

- Keep hands and other body parts away from moving / rotating parts such as the cooling fan, flywheel or PTO shaft.
- Wear tight-fitting clothing and keep your hair short or tie it back while the engine is running.
- Remove all jewelry before you operate or service the machine.
- NEVER start the engine in gear. Sudden movement of the engine and / or machine could cause death or serious personal injury.
- NEVER operate the engine without the guards in place.
- Before you start the engine make sure that all bystanders are clear of the area.
- Keep children and pets away while the engine is operating.
- Check before starting the engine that any tools or shop rags used during maintenance have been removed from the area.
- Failure to comply could result in death or serious injury.

0000002en

**⚠ WARNING**

**SUDDEN MOVEMENT HAZARD!**

- Engaging the transmission or PTO at an elevated engine speed could result in unexpected movement of the equipment.
- Failure to comply could result in death or serious injury.

0000006en

**⚠ WARNING**

**ALCOHOL AND DRUG HAZARD!**

- NEVER operate the engine while you are under the influence of alcohol or drugs.
- NEVER operate the engine when you are feeling ill.
- Failure to comply could result in death or serious injury.

0000004en

**⚠ WARNING**

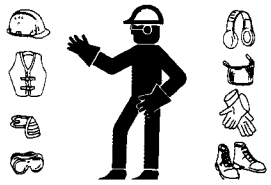

**EXPOSURE HAZARD!**

- Wear personal protective equipment such as gloves, work shoes, eye and hearing protection as required by the task at hand.
- NEVER wear jewelry, unbuttoned cuffs, ties or loose-fitting clothing when you are working near moving / rotating parts such as the cooling fan, flywheel or PTO shaft.
- ALWAYS tie back long hair when you are working near moving / rotating parts such as a cooling fan, flywheel, or PTO shaft.
- NEVER operate the engine while wearing a headset to listen to music or radio because it will be difficult to hear the alert signals.
- Failure to comply could result in death or serious injury.

0000005en

**⚠ WARNING**

**BURN HAZARD!**

- If you must drain the engine oil while it is still hot, stay clear of the hot engine oil to avoid being burned.
- ALWAYS wear eye protection.
- Failure to comply could result in death or serious injury.

0000011en

**⚠ WARNING**

**BURN HAZARD!**

- Batteries contain sulfuric acid. NEVER allow battery fluid to come in contact with clothing, skin or eyes. Severe burns could result. ALWAYS wear safety goggles and protective clothing when servicing the battery. If battery fluid contacts the eyes and / or skin, immediately flush the affected area with a large amount of clean water and obtain prompt medical treatment.
- Failure to comply could result in death or serious injury.

0000007en

**⚠ WARNING**

**SHOCK HAZARD!**

- Turn off the battery switch (if equipped) or disconnect the negative battery cable before servicing the electrical system.
- Check the electrical harnesses for cracks, abrasions, and damaged or corroded connectors. ALWAYS keep the connectors and terminals clean.
- Failure to comply could result in death or serious injury.

0000009en

**⚠ WARNING**

**HIGH-PRESSURE HAZARD!**

- Avoid skin contact with the high-pressure diesel fuel spray caused by a fuel system leak such as a broken fuel injection line. High-pressure fuel can penetrate your skin and result in serious injury. If you are exposed to high-pressure fuel spray, obtain prompt medical treatment.
- NEVER check for a fuel leak with your hands. ALWAYS use a piece of wood or cardboard. Have your authorized Yanmar industrial engine dealer or distributor repair the damage.
- Failure to comply could result in death or serious injury.

0000008en

**⚠ WARNING**

**ENTANGLEMENT HAZARD!**

- Stop the engine before you begin to service it.
- NEVER leave the key in the key switch when you are servicing the engine. Someone may accidentally start the engine and not realize you are servicing it. This could result in a serious injury.
- If you must service the engine while it is operating, remove all jewelry, tie back long hair, and keep your hands, other body parts and clothing away from moving / rotating parts.
- Failure to comply could result in death or serious injury.

0000010en

**⚠ CAUTION**

**FLYING OBJECT HAZARD!**

- ALWAYS wear eye protection when servicing the engine and when using compressed air or high-pressure water. Dust, flying debris, compressed air, pressurized water or steam may injure your eyes.
- Failure to comply may result in minor or moderate injury.

0000003en

**CAUTION**

- Only use diesel fuels recommended by Yanmar for the best engine performance, to prevent engine damage and to comply with EPA / ARB warranty requirements.
- Only use clean diesel fuel.
- NEVER remove the primary strainer (if equipped) from the fuel tank filler port. If removed, dirt and debris could get into the fuel system causing it to clog.

0000004en

**CAUTION**

- Only use the engine oil specified. Other engine oils may affect warranty coverage, cause internal engine components to seize and / or shorten engine life.
- Prevent dirt and debris from contaminating the engine oil. Carefully clean the oil cap / dipstick and the surrounding area before you remove the cap.
- NEVER mix different types of engine oil. This may adversely affect the lubricating properties of the engine oil.
- NEVER overfill. Overfilling may result in white exhaust smoke, engine overspeed or internal damage.

0000005en

**CAUTION**

- Only use the engine coolant specified. Other engine coolants may affect warranty coverage, cause an internal buildup of rust and scale and / or shorten engine life.
- Prevent dirt and debris from contaminating the engine coolant. Carefully clean the radiator cap and the surrounding area before you remove the cap.
- NEVER mix different types of engine coolants. This may adversely affect the properties of the engine coolant.

0000006en

**CAUTION**

- NEVER attempt to modify the engine's design or safety features such as defeating the engine speed limit control or the diesel fuel injection quantity control.
- Modifications may impair the engine's safety and performance characteristics and shorten the engine's life. Any alterations to this engine may void its warranty. Be sure to use Yanmar genuine replacement parts.

0000079en

## CAUTION

The tightening torque in the Standard Torque Chart in the *Periodic Maintenance Section* of this manual should be applied only to the bolts with a "7" head. (JIS strength classification: 7T)

- Apply 60% torque to bolts that are not listed.
- Apply 80% torque when tightened to aluminum alloy.

0000023enTNVIDI-DIOM

## CAUTION

Observe the following environmental operating conditions to maintain engine performance and avoid premature engine wear:

- Avoid operating in extremely dusty conditions.
- Avoid operating in the presence of chemical gases or fumes.
- Avoid operating in a corrosive atmosphere such as salt water spray.
- NEVER install the engine in a floodplain unless proper precautions are taken to avoid being subject to a flood.
- NEVER expose the engine to the rain.

0000003en

## CAUTION

Observe the following environmental operating conditions to maintain engine performance and avoid premature engine wear:

- The standard range of ambient temperatures for the normal operation of Yanmar engines is from +5°F (-15°C) to +113°F (+45°C).
- If the ambient temperature exceeds +113°F (+45°C) the engine may overheat and cause the engine oil to break down.
- If the ambient temperature is below +5°F (-15°C) the engine will be hard to start and the engine oil may not flow easily.
- Contact your authorized Yanmar industrial engine dealer or distributor if the engine will be operated outside of this standard temperature range.

0000065en

## CAUTION

NEVER hold the key in the START position for longer than 15 seconds or the starter motor will overheat.

0000007en

## CAUTION

For maximum engine life, Yanmar recommends that when shutting the engine down, you allow the engine to idle, without load, for five minutes. This will allow the engine components that operate at high temperatures, such as the turbocharger (if equipped) and exhaust system, to cool slightly before the engine itself is shut down.

0000008en

**CAUTION**

NEVER use an engine starting aid such as ether. Engine damage will result.

0000009en

**CAUTION**

Make sure the engine is installed on a level surface. If a continuously running engine is installed at an angle greater than (IDI = 25°, DI = 30°) in any direction or if an engine runs for short periods of time (less than three minutes) at an angle greater than (IDI = 30°, DI = 35°) in any direction, engine oil may enter the combustion chamber causing excessive engine speed and white exhaust smoke. This may cause serious engine damage.

0000010enTNV

**CAUTION**

New Engine Break-in:

- On the initial engine start-up, allow the engine to idle for approximately 15 minutes while you check for proper engine oil pressure, diesel fuel leaks, engine oil leaks, coolant leaks, and for proper operation of the indicators and / or gauges.
- During the first hour of operation, vary the engine speed and the load on the engine. Short periods of maximum engine speed and load are desirable. Avoid prolonged operation at minimum or maximum engine speeds and loads for the next four to five hours.
- During the break-in period, carefully observe the engine oil pressure and engine temperature.
- During the break-in period, check the engine oil and coolant levels frequently.

0000011en

**CAUTION**

NEVER engage the starter motor while the engine is running. This may damage the starter motor pinion and / or ring gear.

0000012en

**CAUTION**

Make it a habit to perform daily checks. *See Daily Checks in the Before You Operate Section of this manual.*

Periodic maintenance prevents unexpected downtime, reduces the number of accidents due to poor machine performance and helps extend the life of the engine.

0000060enTNVIDI-DIOM

**CAUTION**

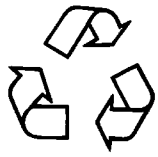

- ALWAYS be environmentally responsible.
- Follow the guidelines of the EPA or other governmental agencies for the proper disposal of hazardous materials such as engine oil, diesel fuel and engine coolant. Consult the local authorities or reclamation facility.
- NEVER dispose of hazardous materials irresponsibly by dumping them into a sewer, on the ground, or into ground water or waterways.
- Failure to follow these procedures may seriously harm the environment.

0000013en

**CAUTION**

Protect the air cleaner, turbocharger (if equipped) and electric components from damage when you use steam or high-pressure water to clean the engine.

0000014en

**CAUTION**

- NEVER overfill the engine with engine oil.
- ALWAYS keep the oil level between the upper and lower lines on the oil cap / dipstick.

0000015en

**CAUTION**

NEVER use high-pressure water or compressed air at greater than 28 psi (193 kPa; 19 686 mmAq) or a wire brush to clean the radiator fins. Radiator fins damage easily.

0000016en

**CAUTION**

NEVER attempt to adjust the low or high idle speed limit screw. This may impair the safety and performance of the machine and shorten its life. If the idle speed limit screws require adjustment, see your authorized Yanmar industrial engine dealer or distributor.

0000017en

**CAUTION**

- When the engine is operated in dusty conditions, clean the air cleaner element more frequently.
- NEVER operate the engine with the air cleaner element(s) removed. This may allow foreign material to enter the engine and damage it.

0000026en

**CAUTION**

Establish a periodic maintenance plan according to the engine application and make sure you perform the required periodic maintenance at intervals indicated. Failure to follow these guidelines will impair the engine's safety and performance characteristics, shorten the engine's life and may affect the warranty coverage on your engine. *See Yanmar Limited Warranty in the Warranty Section of this manual.*

Consult your authorized Yanmar industrial engine dealer or distributor for assistance when checking items marked with a ●.

0000024enTNVIDI-DIOM

**CAUTION**

If no water drips when the fuel filter / water separator drain cock is opened, loosen the air vent screw on the top of the fuel filter / water separator by using a screwdriver to turn it counterclockwise 2-3 turns.

This may occur if the fuel filter / water separator is positioned higher than the fuel level in the fuel tank. After draining the fuel filter / water separator, be sure to tighten the air vent screw.

0000025enTNVIDI-DI

**CAUTION**

The maximum air intake restriction, in terms of differential pressure measurement, must not exceed 0.90 psi (6.23 kPa; 635 mmAq). Clean or replace the air cleaner element if the air intake restriction exceeds the above mentioned value.

0000046en

# PRECAUTIONS

## The Importance of Periodic Maintenance

Engine deterioration and wear occurs in proportion to length of time the engine has been in service and the conditions the engine is subject to during operation. Periodic maintenance prevents unexpected downtime, reduces the number of accidents due to poor machine performance and helps extend the life of the engine.

## Performing Periodic Maintenance

**⚠ WARNING**

**EXHAUST HAZARD!**

- **NEVER operate the engine in an enclosed area such as a garage, tunnel, underground room, manhole or ship's hold without proper ventilation.**
- **NEVER block windows, vents, or other means of ventilation if the engine is operating in an enclosed area. All internal combustion engines create carbon monoxide gas during operation. Accumulation of this gas within an enclosure could cause illness or even death.**
- **Make sure that all connections are tightened to specifications after repair is made to the exhaust system.**
- **Failure to comply could result in death or serious injury.**

0000003en

Perform periodic maintenance procedures in an open, level area free from traffic. If possible, perform the procedures indoors to prevent environmental conditions, such as rain, wind, or snow, from damaging the machine.

## The Importance of Daily Checks

Periodic Maintenance Schedules assume that the daily checks are performed on a regular basis. Make it a habit of performing daily checks before the start of each shift. *See Daily Checks on page 55.*

## Keep a Log of Engine Hours and Daily Checks

Keep a log of the number of hours the engine is run each day and a log of the daily checks performed. Also note the date, type of repair (e.g., replaced alternator), and parts needed for any service needed between the periodic maintenance intervals. Periodic maintenance intervals are every 50, 250, 500, 1000, 1500 and 2000 engine hours. Failure to perform periodic maintenance will shorten the life of the engine.

## Yanmar Replacement Parts

Yanmar recommends that you use genuine Yanmar parts when replacement parts are needed. Genuine replacement parts help ensure long engine life.

## Tools Required

Before you start any periodic maintenance procedure make sure you have the tools you need to perform all of the required tasks.

## Ask Your Authorized Yanmar Industrial Engine Dealer or Distributor For Help

Our professional service technicians have the expertise and skills to help you with any maintenance or service related procedures you need help with.

## Required EPA / ARB Maintenance USA Only

To maintain optimum engine performance and compliance with the Environmental Protection Agency (EPA) Regulations Non-Road Engines and the California Air Resources Board (ARB, California), it is essential that you follow the *Periodic Maintenance Schedule on page 85* and *Periodic Maintenance Procedures on page 88*.

## EPA / ARB Installation Requirements USA Only

The following are the installation requirements for the EPA / ARB. Unless these requirements are met, the exhaust gas emissions will not be within the limits specified by the EPA and ARB.

Maximum Exhaust Gas Restriction shall be:

- 2TNV70, 3TNV70 and 3TNV76: 1.71 psi (11.8 kPa; 1200 mm Aq) or less

- 3TNV84T, 4TNV84T, 4TNV98T, 4TNV106T: 1.71 psi (11.8kPa, 1200mmAq) or less
- 3TNV82A, 3TNV84, 3TNV88, 4TNV84, 4TNV88, 4TNV94L, 4TNV98, 4TNV106: 2.22 psi (15.3kPa, 1560mmAq) or less
- 4TNV84T-Z, 4TNV98T-Z (With Electronic Control System EGR): 1.49psi (10.3kPa, 1050mmAq) or less
- 4TNV98-Z(E), 4TNV98T-ZCL: 1.94 psi (13.4kPa, 1360mmAq) or less

Maximum air intake restriction shall be 0.90 psi (6.23 kPa; 635 mm Aq) or less. Clean or replace the air cleaner element if the air intake restriction exceeds the above mentioned value.

## Tightening Fasteners

Use the correct amount of torque when you tighten fasteners on the machine. Applying excessive torque may damage the fastener or component and not enough torque may cause a leak or component failure.

**CAUTION**

**The tightening torque in the Standard Torque Chart in the *Periodic Maintenance Section* of this manual should be applied only to the bolts with a "7" head. (JIS strength classification: 7T)**

- **Apply 60% torque to bolts that are not listed.**
- **Apply 80% torque when tightened to aluminum alloy.**

0000023enTNVIDI-DIOM

# STANDARD TORQUE CHART

| Thread Size × Pitch mm | | M6×1.0 | M8×1.25 | M10×1.5 | M12×1.75 | M14×1.5 | M16×1.5 |
|---|---|---|---|---|---|---|---|
| Tightening Torque | in.-lb | 96.0 ± 9.0 | - | - | - | - | - |
| | ft-lb | - | 19.0 ± 2.0 | 36.0 ± 4.0 | 65.0 ± 7.0 | 101.0 ± 7.0 | 167.0 ± 7.0 |
| | N·m | 10.8 ± 1.0 | 25.5 ± 2.9 | 49.0 ± 4.9 | 88.3 ± 9.8 | 137.0 ± 9.8 | 226.0 ± 9.8 |
| | kgf/m | 1.1 ± 0.1 | 2.6 ± 0.3 | 5.0 ± 0.5 | 9.0 ± 1.0 | 14.0 ± 1.5 | 23.0 ± 2.0 |

Note: Torque values shown in this manual are for clean, non-lubricated fasteners unless otherwise specified.

# PERIODIC MAINTENANCE SCHEDULE

Daily and periodic maintenance is important to keep the engine in good operating condition. The following is a summary of maintenance items by periodic maintenance intervals. Periodic maintenance intervals vary depending on engine application, loads, diesel fuel and engine oil used and are hard to establish definitively. The following should be treated only as a general guideline.

**CAUTION**

**Establish a periodic maintenance plan according to the engine application and make sure you perform the required periodic maintenance at intervals indicated. Failure to follow these guidelines will impair the engine's safety and performance characteristics, shorten the engine's life and may affect the warranty coverage on your engine.** ***See Yanmar Limited Warranty in the Warranty Section of this manual.***

**Consult your authorized Yanmar industrial engine dealer or distributor for assistance when checking items marked with a ●.**

0000024enTNVIDI-DIOM

## Periodic Maintenance Chart

○: Check ◇: Replace ●: Contact your authorized Yanmar industrial engine dealer or distributor

| System | Check Item | Daily | Periodic Maintenance Interval | | | | | |
|---|---|---|---|---|---|---|---|---|
| | | | Every 50 hours | Every 250 hours | Every 500 hours | Every 1000 hours | Every 1500 hours | Every 2000 hours |
| Cooling System | Check and Refill Engine Coolant | ○ | | | | | | |
| | Check and Clean Radiator Fins | | ○ | | | | | |
| | Check and Adjust Cooling Fan V-belt | | ○ 1st time | ○ 2nd and after | | | | |
| | Drain, Flush and Refill Cooling System With New Coolant | | | | | ◇ or every 1 year which-ever comes first | | |
| Cylinder Head | Adjust Intake / Exhaust Valve Clearance | | | | | ● | | |
| | Lap Intake / Exhaust Valve Seats | | | | | | | ● |
| Electrical Equipment | Check Indicators | ○ | | | | | | |
| | Check Battery | | ○ | | | | | |
| Engine Oil | Check Engine Oil Level | ○ | | | | | | |
| | Drain and Fill Engine Oil | | ◇ 1st time | ◇ 2nd and after | | | | |
| | Replace Engine Oil Filter | | | | | | | |
| Engine Speed Control | Check and Adjust Governor Lever and Engine Speed Control | ○ | | ○ | | | | |
| Emission Control Warranty | Inspect, Clean And Test Fuel Injectors | | | | | | ● | |
| | DI ENGINE Inspect Turbocharger (Blower Wash as Necessary) 3TNV84T, 4TNV84T, 4TNV98T, 4TNV106T, 3TNV84T-B, 4TNV84T-Z, 4TNV98T-Z | | | | | | ● | |
| | DI ENGINE Inspect, Clean and Test EGR Valve 4TNV84T, 4TNV98T | | | | | | ● | |
| | Clean EGR Lead Valve 4TNV84T, 4TNV98T | | | | | | ● | |
| | Clean EGR Cooler (Clean to Blow Water/Air Passages) 4TNV84T, 4TNV98T | | | | | | ● | |
| | Inspect Crankcase Breather System | | | | | | ● | |
| Fuel | Check and Refill Fuel Tank Level | ○ | | | | | | |
| | Drain Fuel Tank | | | ○ | | | | |
| | Drain Fuel Filter / Water Separator | | ○ | | | | | |
| | Check Fuel Filter / Water Separator | ○ | | | | | | |
| | Clean Fuel Filter / Water Separator | | | | ○ | | | |
| | Replace Fuel Filter | | | | ◇ | | | |
| Hoses | Replace Fuel System and Cooling System Hoses | | | | | | | ◇ or every 2 yrs. |

| ○: Check ◇: Replace ●: Contact your authorized Yanmar industrial engine dealer or distributor | | | | | | | | |
|---|---|---|---|---|---|---|---|---|
| System | Check Item | Daily | Periodic Maintenance Interval | | | | | |
| | | | Every 50 hours | Every 250 hours | Every 500 hours | Every 1000 hours | Every 1500 hours | Every 2000 hours |
| Intake and Exhaust | Clean or Replace Air Cleaner Element | | | ○ | ◇ | | | |
| Complete Engine | Overall Visual Check Daily | ○ | | | | | | |

Note: These procedures are considered normal maintenance and are performed at the owner's expense.

# PERIODIC MAINTENANCE PROCEDURES

## After Initial 50 Hours of Operation

Perform the following maintenance after the initial 50 hours of operation.

- Replace Engine Oil and Engine Oil Filter
- Check and Adjust Cooling Fan V-Belt

### Replace Engine Oil and Engine Oil Filter

**⚠ WARNING**

**BURN HAZARD!**

- If you must drain the engine oil while it is still hot, stay clear of the hot engine oil to avoid being burned.
- ALWAYS wear eye protection.
- Failure to comply could result in death or serious injury.

0000011en

**⚠ WARNING**

**SUDDEN MOVEMENT HAZARD!**

- Engaging the transmission or PTO at an elevated engine speed could result in unexpected movement of the equipment.
- Failure to comply could result in death or serious injury.

0000006en

**CAUTION**

- Only use the engine oil specified. Other engine oils may affect warranty coverage, cause internal engine components to seize and / or shorten engine life.
- Prevent dirt and debris from contaminating the engine oil. Carefully clean the oil cap / dipstick and the surrounding area before you remove the cap.
- NEVER mix different types of engine oil. This may adversely affect the lubricating properties of the engine oil.
- NEVER overfill. Overfilling may result in white exhaust smoke, engine overspeed or internal damage.

0000005en

**CAUTION**

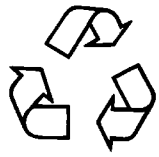

- ALWAYS be environmentally responsible.
- Follow the guidelines of the EPA or other governmental agencies for the proper disposal of hazardous materials such as engine oil, diesel fuel and engine coolant. Consult the local authorities or reclamation facility.
- NEVER dispose of hazardous materials irresponsibly by dumping them into a sewer, on the ground, or into ground water or waterways.
- Failure to follow these procedures may seriously harm the environment.

0000013en

The engine oil on a new engine becomes contaminated from the initial break-in of internal parts. It is very important that the initial oil change is performed as scheduled.

Note: The oil drain plug may be in another location if an optional oil pan is used.

Drain the engine oil as follows:

1. Make sure the engine is level.
2. Start the engine and bring it up to operating temperature.
3. Stop the engine.
4. Remove one of the oil filler caps **(Figure 1, (1))** to vent the engine crankcase and allow the engine oil to drain more easily.
5. Position a container under the engine to collect waste oil.

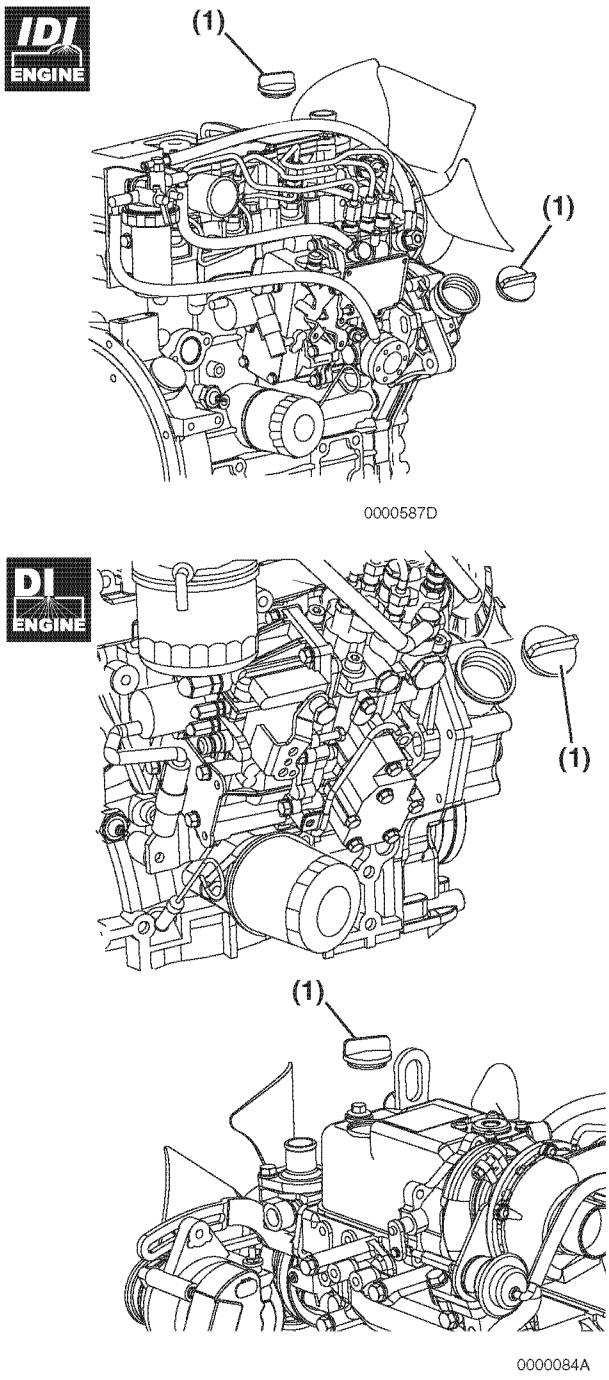


***Figure 1***

6. Remove the oil drain plug **(Figure 2, (1))** from the engine oil pan. Allow oil to drain.
7. After all oil has been drained from the engine, reinstall the oil drain plug **(Figure 2, (1))** and tighten to 40-47 ft-lb (53.9-63.7 N·m, 5.5-6.5 kgf/m).
8. Dispose of used oil properly.

Remove the engine oil filter as follows:

1. Turn the engine oil filter **(Figure 2, (2))** counterclockwise **(Figure 2, (3))** using an oil filter wrench.
2. Clean the engine oil filter mounting face.
3. Lightly coat the gasket on the new oil filter with engine oil. Install the new engine oil filter manually by turning it clockwise **(Figure 2, (4))** until it contacts the mounting surface. Tighten to 14-17 ft-lb (19.6-23.5 N·m, 2.0-2.4 kgf/m) or one additional turn using the oil filter wrench.

**Engine Oil Filter Part No.**

| | |
|---|---|
| 2TNV70, 3TNV70, 3TNV76 | 119305-35151 |

**Engine Oil Filter Part No.**

| | Standard | Dust proof * |
|---|---|---|
| 3TNV82A<br>3TNV84<br>- 4TNV98<br>3TNV82A-B<br>3TNV88-B<br>- 4TNV98-Z<br>4TNV98-E | 129150-35153 | 119005-35151 |
| 4TNV98T<br>4TNV98T-Z<br>4TNV106,<br>4TNV106T | 119005-35151 | |

* Consult the operation manual for the driven machine for applicability of the dust proof filter.

4. Add new engine oil to the engine through either of the oil filler ports as specified in *Adding Engine Oil on page 50*.

**CAUTION**

- **NEVER overfill the engine with engine oil.**
- **ALWAYS keep the oil level between the upper and lower lines on the oil cap / dipstick.**

0000015en

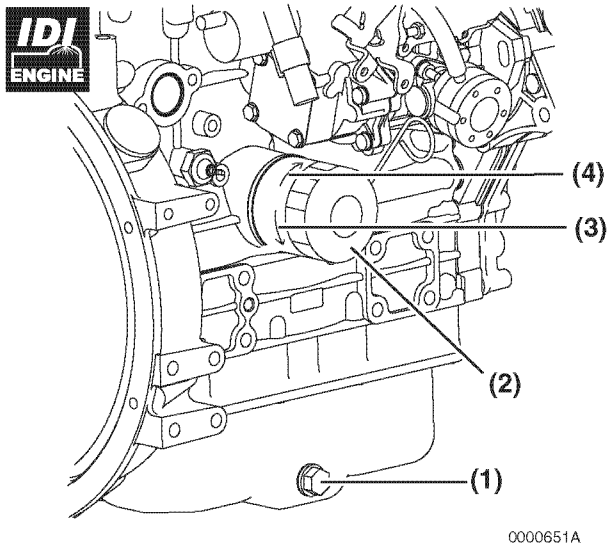


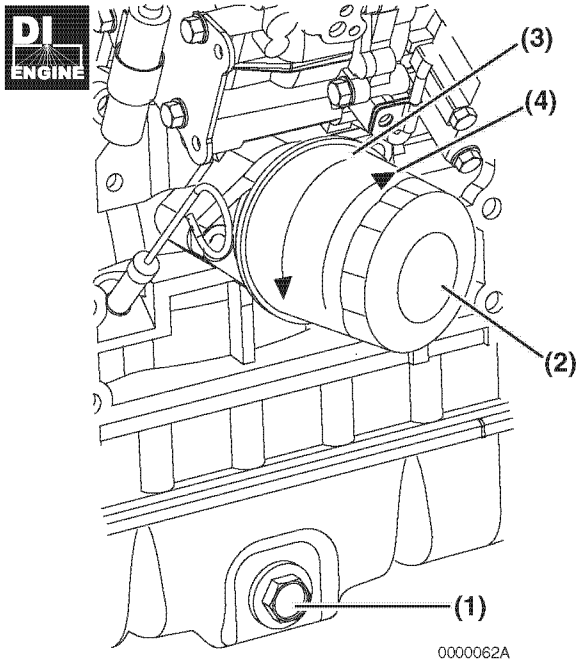


***Figure 2***

5. Warm up the engine by running it for 5 minutes and check for any engine oil leaks.

6. After engine is warm, shut it off and let it sit for 10 minutes.
7. Recheck the engine oil level.
8. Add engine oil to engine oil filler port **(Figure 3, (5))** as needed until the level is between the upper **(Figure 3, (2))** and lower lines **(Figure 3, (3))** shown on the dipstick **(Figure 3, (1))**.
9. Reinstall the oil filler cap **(Figure 3, (4))**. If any engine oil is spilled, wipe it away with a clean cloth.

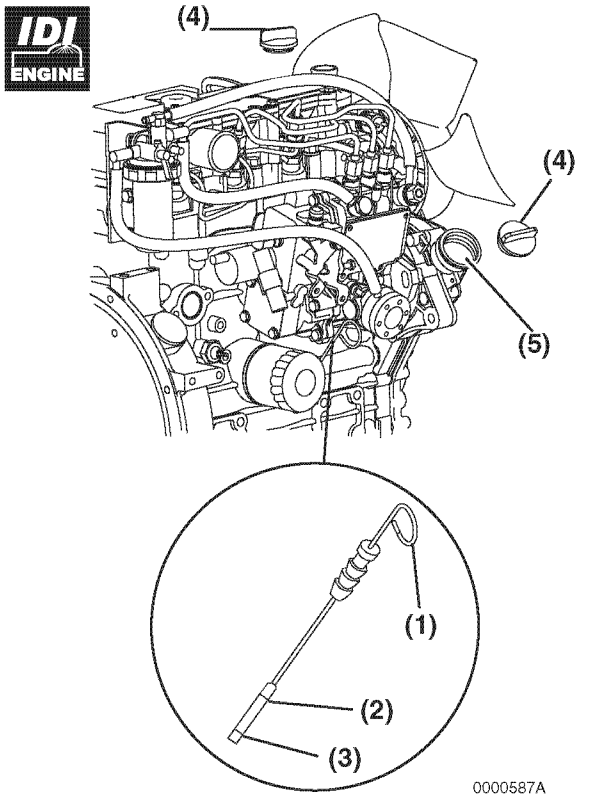


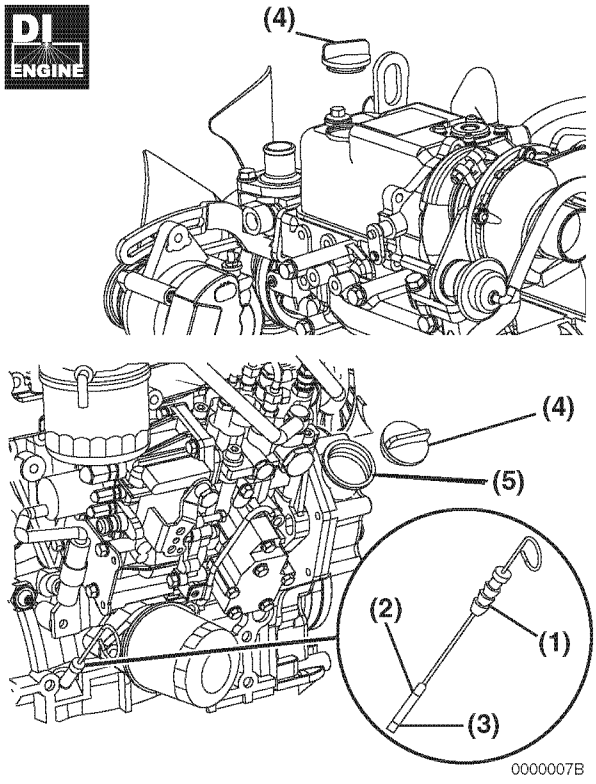


*Figure 3*

## Check and Adjust Cooling Fan V-Belt

The V-belt will slip if it does not have the proper tension. This will prevent the alternator from generating sufficient power. Also, the engine will overheat due to the engine coolant pump pulley slipping.

Check and adjust the V-belt tension (deflection) as follows:

1. Press the V-belt down with your thumb with a force of approximately 22 ft-lb (98 N·m, 10 kgf/m) to check the deflection.

   There are three positions to check for V-belt tension **(Figure 4, (A), (B) and (C))**. You can check the tension at whichever position is the most accessible. The proper deflection of a used V-belt at each position is:

| Used V-Belt Tension | | |
|---|---|---|
| **A** | **B** | **C** |
| 3/8 - 1/2 in. (10 - 14 mm) | 1/4 - 3/8 in. (7 - 10 mm) | 5/16 - 1/2 in. (9 - 13 mm) |

Note: A “Used V-Belt” refers to a V-belt which has been used on a running engine for five minutes or more.

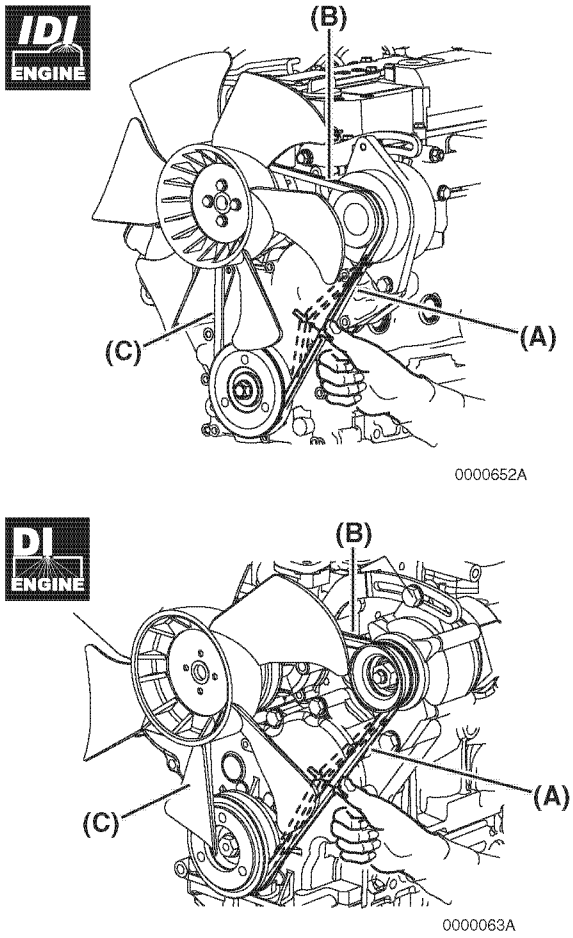


*Figure 4*

2. If necessary, adjust the V-belt tension. Loosen the adjusting bolt **(Figure 5, (1))** and move the alternator **(Figure 5, (2))** with a pry bar **(Figure 5, (3))** to tighten the V-belt to the desired tension. Then tighten the adjusting bolt.

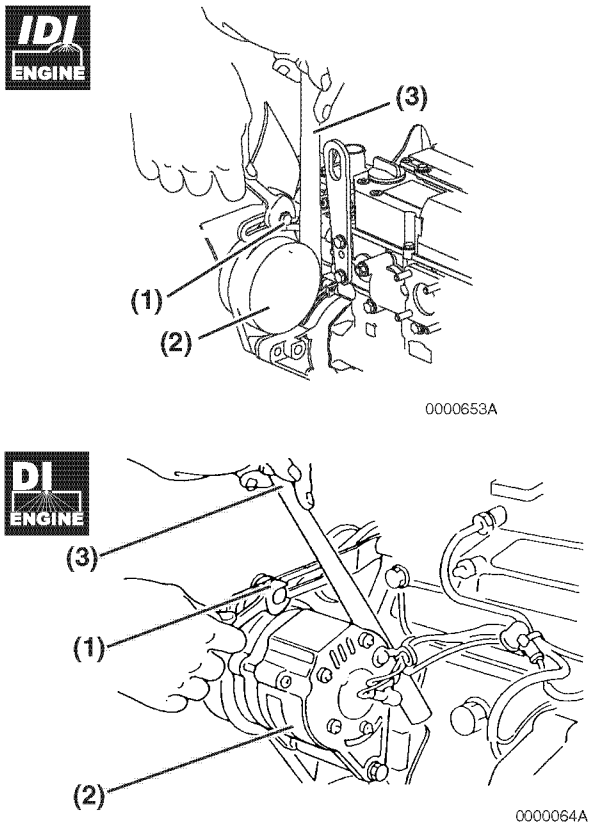


*Figure 5*

3. Tighten the V-belt to the proper tension. There must be clearance **(Figure 6, (1))** between the V-belt and the bottom of the pulley groove. If there is no clearance **(Figure 6, (2))** between the V-belt and the bottom of the pulley groove, replace the V-belt.

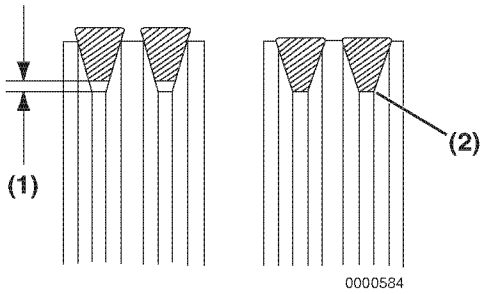


*Figure 6*

4. Check the V-belt for cracks, oil or wear. If any of these conditions exist, replace the V-belt.
5. Install the new V-belt. Refer to the table for proper tension.

| New V-Belt Tension | | |
|---|---|---|
| **A** | **B** | **C** |
| 5/16 - 7/16 in. (8 - 12 mm) | 3/16 - 5/16 in. (5 - 8 mm) | 1/4 - 7/16 in. (7 - 11 mm) |

6. After adjusting, run the engine for 5 minutes or more. Check the tension again using the specifications for a used V-belt.

| Used V-Belt Tension | | |
|---|---|---|
| **A** | **B** | **C** |
| 3/8 - 1/2 in. (10 - 14 mm) | 1/4 - 3/8 in. (7 - 10 mm) | 5/16 - 1/2 in. (9 - 13 mm) |

## Every 50 Hours of Operation

After you complete the initial 50 hour maintenance procedures, perform the following procedures every 50 hours thereafter.

- **Drain Fuel Filter / Water Separator**
- **Check Battery**

### Drain Fuel Filter / Separator

**⚠ DANGER**

**FIRE AND EXPLOSION HAZARD!**

- **Diesel fuel is flammable and explosive under certain conditions.**
- **When you remove any fuel system component to perform maintenance (such as changing the fuel filter) place an approved container under the opening to catch the fuel.**
- **NEVER use a shop rag to catch the fuel. Vapors from the rag are flammable and explosive.**
- **Wipe up any spills immediately.**
- **Wear eye protection. The fuel system is under pressure and fuel could spray out when you remove any fuel system component.**
- **Failure to comply will result in death or serious injury.**

0000009en

**CAUTION**

**If no water drips when the fuel filter / water separator drain cock is opened, loosen the air vent screw on the top of the fuel filter / water separator by using a screwdriver to turn it counterclockwise 2-3 turns.**

**This may occur if the fuel filter / water separator is positioned higher than the fuel level in the fuel tank. After draining the fuel filter / water separator, be sure to tighten the air vent screw.**

0000025enTNVIDI-DI

**CAUTION**

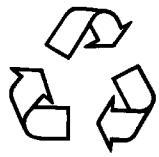

- **ALWAYS be environmentally responsible.**
- **Follow the guidelines of the EPA or other governmental agencies for the proper disposal of hazardous materials such as engine oil, diesel fuel and engine coolant. Consult the local authorities or reclamation facility.**
- **NEVER dispose of hazardous materials irresponsibly by dumping them into a sewer, on the ground, or into ground water or waterways.**
- **Failure to follow these procedures may seriously harm the environment.**

0000013en

Drain the fuel filter / water separator whenever there are contaminants, such as water, collected in the bottom of the cup. NEVER wait until the scheduled periodic maintenance if contaminants are discovered.

The separator cup is made from semi-transparent material. In the cup is a red-colored float ring. The float ring will rise to the surface of the water to show how much needs to be drained. Also, some optional fuel filter / water separators are equipped with a sensor to detect the amount of contaminants. This sensor sends a signal to an indicator to alert the operator.

IDI ENGINE Drain the fuel filter / water separator as follows:

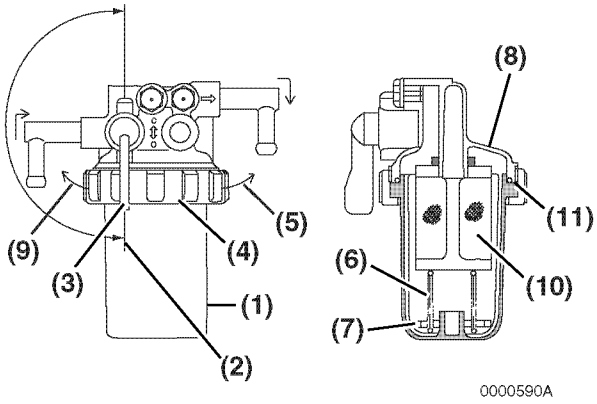


*Figure 7*

1. Position an approved container under the fuel filter / water separator **(Figure 7, (1))** to collect the contaminants.
2. Close **(Figure 7, (2))** the fuel cock **(Figure 7, (3))**.
3. Turn the retaining ring **(Figure 7, (4))** to the left **(Figure 7, (9))**.
4. Carefully remove the cup **(Figure 7, (1))**. Remove the retaining spring **(Figure 7, (6))** and float **(Figure 7, (7))** from the cup. Pour the fuel into an approved container and dispose of waste properly. Hold the bottom of the cup with a shop towel to prevent the fuel from dripping. Wipe up any spills immediately.
5. Clean the inside of the cup.
6. Inspect the condition of the mesh filter **(Figure 7, (10))**. Clean the mesh filter if necessary.
7. Inspect the condition of the O-ring **(Figure 7, (11))**. Replace the O-ring if necessary.
8. Put the float **(Figure 7, (7))** and retaining spring **(Figure 7, (6))** inside the cup.
9. Reinstall the cup to the mounting flange **(Figure 7, (8))** and turn the retaining ring **(Figure 7, (4))** to the right **(Figure 7, (5))**. hand-tighten only.
10. Open the fuel cock **(Figure 7, (3))**.
11. Be sure to prime the diesel fuel system when you are done. *See Priming the Fuel System on page 48.*
12. Check for fuel leaks.

DI ENGINE Drain the fuel filter / water separator as follows:

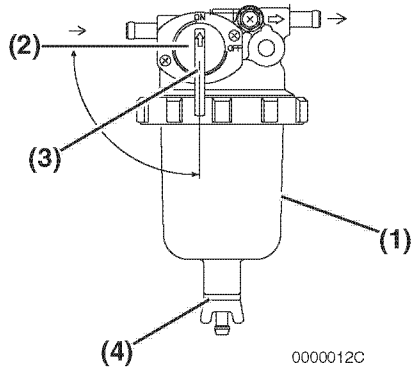


*Figure 8*

1. Position an approved container under the fuel filter / water separator **(Figure 8, (1))** to collect the contaminants.
2. Close **(Figure 8, (2))** the fuel cock **(Figure 8, (3))**.
3. Loosen the drain cock **(Figure 8, (4))** at the bottom of the fuel filter / water separator. Drain any water collected inside.
4. Hand-tighten the drain cock.
5. Open the fuel cock **(Figure 8, (3))**.

**CAUTION**

**If no water drips when the fuel filter / water separator drain cock is opened, loosen the air vent screw on the top of the fuel filter / water separator by using a screwdriver to turn it counterclockwise 2-3 turns.**

**This may occur if the fuel filter / water separator is positioned higher than the fuel level in the fuel tank. After draining the fuel filter / water separator, be sure to tighten the air vent screw.**

0000025enTNVIDI-DI

6. Be sure to prime the diesel fuel system when you are done. *See Priming the Fuel System on page 48.*
7. Check for fuel leaks.

## Check Battery

**DANGER**

**EXPLOSION HAZARD!**

- **Never short out the battery terminals, including when checking the remaining battery charge. This will result in a spark and may cause an explosion or fire. Use a hydrometer to check the remaining battery charge.**
- **If the electrolyte is frozen, slowly warm the battery before you recharge it.**
- **Failure to comply will result in death or serious injury.**

0000007en

**WARNING**

**BURN HAZARD!**

- **Batteries contain sulfuric acid. NEVER allow battery fluid to come in contact with clothing, skin or eyes. Severe burns could result. ALWAYS wear safety goggles and protective clothing when servicing the battery. If battery fluid contacts the eyes and / or skin, immediately flush the affected area with a large amount of clean water and obtain prompt medical treatment.**
- **Failure to comply could result in death or serious injury.**

0000007en

**CAUTION**

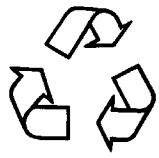

- **ALWAYS be environmentally responsible.**
- **Follow the guidelines of the EPA or other governmental agencies for the proper disposal of hazardous materials such as engine oil, diesel fuel and engine coolant. Consult the local authorities or reclamation facility.**
- **NEVER dispose of hazardous materials irresponsibly by dumping them into a sewer, on the ground, or into ground water or waterways.**
- **Failure to follow these procedures may seriously harm the environment.**

0000013en

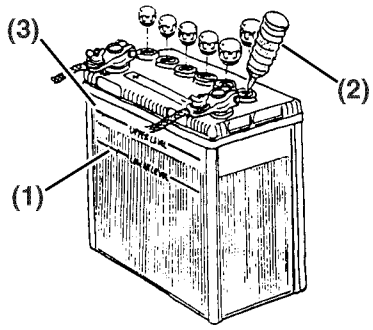


*Figure 9*

- When the amount of fluid nears the lower limit **(Figure 9, (1))**, fill with distilled water **(Figure 9, (2))** so it is at the upper limit **(Figure 9, (3))**. If operation continues with insufficient battery fluid, the battery life is shortened, and the battery may overheat and explode. During the summer, check the fluid level more often than specified.
- If the engine cranking speed is so slow that the engine does not start, recharge the battery.
- If the engine still will not start after charging, have your authorized Yanmar industrial engine dealer or distributor check the battery and the engine's starting system.
- If operating the machine where the ambient temperature could drop to 5°F (-15°C) or less, remove the battery from the machine at the end of the day. Store the battery in a warm place until the next use. This will help start the engine easily at low ambient temperatures.

## Every 250 Hours of Operation

Perform the following maintenance every 250 hours of operation.

- **Drain Fuel Tank**
- **Replace Engine Oil and Engine Oil Filter**
- **Check and Clean Radiator Fins**
- **Check and Adjust Cooling Fan V-Belt**
- **Check and Adjust the Governor Lever and Engine Speed Control**
- **Clean Air Cleaner Element**

### Drain Fuel Tank

**⚠ DANGER**

**FIRE AND EXPLOSION HAZARD!**

- **Diesel fuel is flammable and explosive under certain conditions.**
- **When you remove any fuel system component to perform maintenance (such as changing the fuel filter) place an approved container under the opening to catch the fuel.**
- **NEVER use a shop rag to catch the fuel. Vapors from the rag are flammable and explosive.**
- **Wipe up any spills immediately.**
- **Wear eye protection. The fuel system is under pressure and fuel could spray out when you remove any fuel system component.**
- **Failure to comply will result in death or serious injury.**

0000009en

**CAUTION**

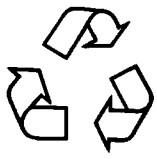

- **ALWAYS be environmentally responsible.**
- **Follow the guidelines of the EPA or other governmental agencies for the proper disposal of hazardous materials such as engine oil, diesel fuel and engine coolant. Consult the local authorities or reclamation facility.**
- **NEVER dispose of hazardous materials irresponsibly by dumping them into a sewer, on the ground, or into ground water or waterways.**
- **Failure to follow these procedures may seriously harm the environment.**

0000013en

Note that a typical fuel tank is illustrated.

1. Position an approved container under the diesel fuel tank **(Figure 10, (1))** to collect the contaminants.

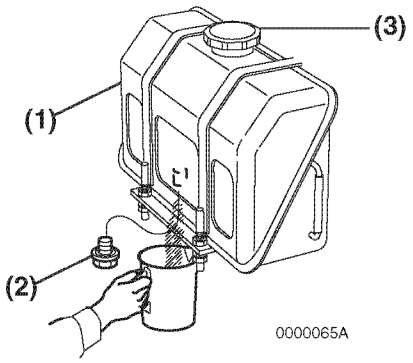


***Figure 10***

2. Remove the fuel cap **(Figure 10, (3))**.
3. Remove the drain plug **(Figure 10, (2))** to drain the contaminants (water, dirt, etc.) from the bottom of the tank.
4. Drain the tank until clean diesel fuel with no water or dirt flows out. Reinstall and tighten the drain plug firmly.
5. Reinstall the fuel cap.
6. Check for leaks.

## Replace Engine Oil and Engine Oil Filter

**CAUTION**

- **Only use the engine oil specified. Other engine oils may affect warranty coverage, cause internal engine components to seize and / or shorten engine life.**
- **Prevent dirt and debris from contaminating the engine oil. Carefully clean the oil cap / dipstick and the surrounding area before you remove the cap.**
- **NEVER mix different types of engine oil. This may adversely affect the lubricating properties of the engine oil.**
- **NEVER overfill. Overfilling may result in white exhaust smoke, engine overspeed or internal damage.**

0000005en

**CAUTION**

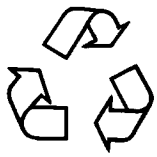

- **ALWAYS be environmentally responsible.**
- **Follow the guidelines of the EPA or other governmental agencies for the proper disposal of hazardous materials such as engine oil, diesel fuel and engine coolant. Consult the local authorities or reclamation facility.**
- **NEVER dispose of hazardous materials irresponsibly by dumping them into a sewer, on the ground, or into ground water or waterways.**
- **Failure to follow these procedures may seriously harm the environment.**

0000013en

Change the engine oil every 250 hours of operation after the initial change at 50 hours. Replace the engine oil filter at the same time.

*See Replace Engine Oil and Engine Oil Filter on page 88.*

## Check and Clean Radiator Fins

**⚠ CAUTION**

**FLYING OBJECT HAZARD!**

- **ALWAYS wear eye protection when servicing the engine and when using compressed air or high-pressure water. Dust, flying debris, compressed air, pressurized water or steam may injure your eyes.**
- **Failure to comply may result in minor or moderate injury.**

0000003en

Dirt and dust adhering to the radiator fins reduce the cooling performance, causing overheating. Make it a rule to check the radiator fins daily and clean as needed.

Note that a typical radiator is shown in **Figure 11** for illustrative purposes only.

- Blow off dirt and dust from fins and radiator with 28 psi (0.19 MPa, 2 kgf/cm$^2$) or less of compressed air **(Figure 11, (1))**. Be careful not to damage the fins with the compressed air.

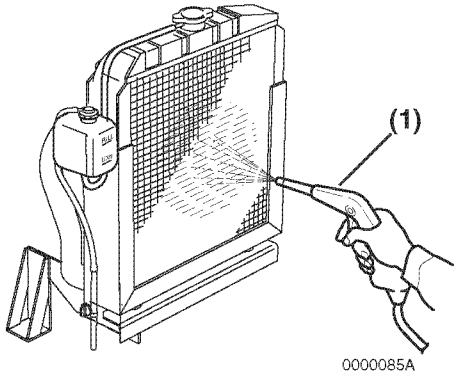


***Figure 11***

- If there is a large amount of contamination on the fins, apply detergent, thoroughly clean and rinse with tap water.

**CAUTION**

**NEVER use high-pressure water or compressed air at greater than 28 psi (193 kPa; 19 686 mmAq) or a wire brush to clean the radiator fins. Radiator fins damage easily.**

0000016en

## Check and Adjust Cooling Fan V-Belt

Check and adjust the cooling fan V-belt every 250 hours of operation after the initial 50 hour V-belt maintenance. *See Check and Adjust Cooling Fan V-Belt on page 92.*

## Check and Adjust the Governor Lever and Engine Speed Control (Except Electronically Controlled Engines)

The governor lever and engine speed control (throttle lever, accelerator pedal etc.), are connected together by a cable or linkage. If the cable becomes stretched, or the linkage wears or loosens, the governor lever may not respond to a change in the position of the engine speed control.

**CAUTION**

**NEVER attempt to adjust the low or high idle speed limit screw. This may impair the safety and performance of the machine and shorten its life. If the idle speed limit screws require adjustment, see your authorized Yanmar industrial engine dealer or distributor.**

0000017en

1. Check that the governor lever **(Figure 12, (1))** makes firm contact with the high idle stop **(Figure 12,** (2)) and the low idle speed limit screw **(Figure 12,** (3)) when the engine speed control is in the full speed or low idle speed positions.
2. If the governor lever does not make proper contact with the high idle stop or the low idle speed limit screw, adjust the throttle cable or linkage as necessary.

Note: DO NOT FORCE the throttle cable or linkage to move. This may damage the the governor lever, the throttle cable or linkage and cause irregular operation of the engine speed control.

**IMPORTANT**

*The engine speed control (throttle lever, accelerator pedal etc.), should be equipped with stops to prevent the application of excessive pressure by the governor lever to either the high idle stop or low idle speed limit screw.*

See your authorized Yanmar industrial dealer or distributor for the adjustment procedures for your specific engine or machine.

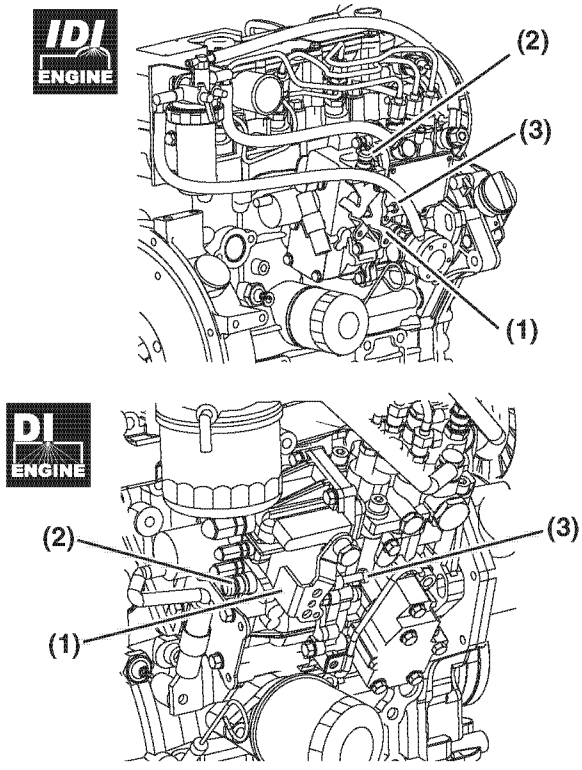


***Figure 12***

## Clean Air Cleaner Element

Note that a typical air cleaner is shown in **Figure 13** and **Figure 14** for illustrative purposes only.

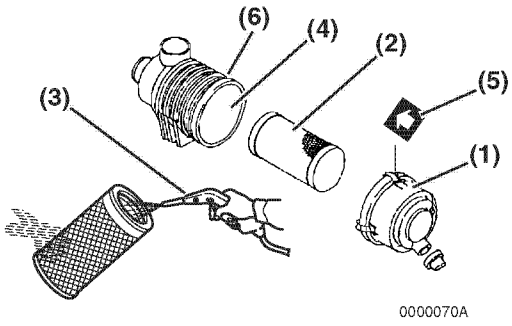


*Figure 13*

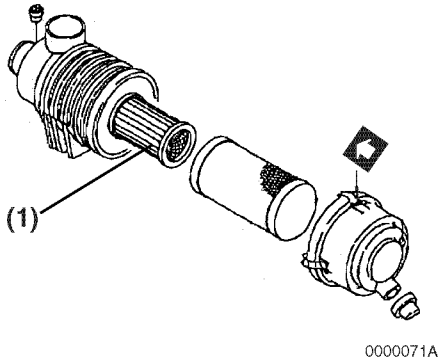


*Figure 14*

The engine performance is adversely affected when the air cleaner element is clogged with dust. Be sure to clean the air filter element periodically.

1. Unlatch and remove the air cleaner cover **(Figure 13, (1))**.
2. Remove the element **(Figure 13, (2))** (outer element if equipped with two elements).

**⚠ CAUTION**

**FLYING OBJECT HAZARD!**

- **ALWAYS wear eye protection when servicing the engine and when using compressed air or high-pressure water. Dust, flying debris, compressed air, pressurized water or steam may injure your eyes.**
- **Failure to comply may result in minor or moderate injury.**

0000003en

3. Blow air **(Figure 13, (3))** through the element from the inside out using 42-71 psi (0.29-0.49 MPa, 3.0-5.0 kgf/cm$^2$) compressed air to remove the particulates. Use the lowest possible air pressure to remove the dust without damaging the element.
4. If the air cleaner is equipped with a double element, *only remove and replace the inner element* **(Figure 14, (1))** *if the engine lacks power or the dust indicator actuates (if equipped).*

Note: The inner element should not be removed when cleaning or replacing the outer element. The inner element is used to prevent dust from entering the engine while servicing the outer element.

5. Replace the element with a new one if the element is damaged, excessively dirty or oily.
6. Clean inside of the air cleaner cover.
7. Reinstall the element into the air cleaner case **(Figure 13, (4))**.
8. Reinstall the air cleaner cover making sure you match the arrow **(Figure 13, (5))** on the cover with the arrow on the case **(Figure 13, (6))**.

9. Latch the air cleaner cover to the case.

**CAUTION**

- **When the engine is operated in dusty conditions, clean the air cleaner element more frequently.**
- **NEVER operate the engine with the air cleaner element(s) removed. This may allow foreign material to enter the engine and damage it.**

0000026en

## Every 500 Hours of Operation

Perform the following maintenance every 500 hours of operation.

- **Replace Air Cleaner Element**
- **Replace Fuel Filter**
- **Clean Fuel Filter / Water Separator**

### Replace Air Cleaner Element

**CAUTION**

**The maximum air intake restriction, in terms of differential pressure measurement, must not exceed 0.90 psi (6.23 kPa; 635 mmAq). Clean or replace the air cleaner element if the air intake restriction exceeds the above mentioned value.**

0000046en

Replace the air cleaner element **(Figure 13, (2))** every 500 hours even if it is not damaged or dirty.

When replacing the element, clean the inside of the air cleaner case **(Figure 13, (4))**.

If the air cleaner is equipped with a double element, *only remove and replace the inner element* **(Figure 14, (1))** *if the engine lacks power or the dust indicator actuates (if equipped).* This is in addition to replacing the outer element.

## Replace Fuel Filter

**⚠ DANGER**

**FIRE AND EXPLOSION HAZARD!**

- Diesel fuel is flammable and explosive under certain conditions.
- When you remove any fuel system component to perform maintenance (such as changing the fuel filter) place an approved container under the opening to catch the fuel.
- NEVER use a shop rag to catch the fuel. Vapors from the rag are flammable and explosive.
- Wipe up any spills immediately.
- Wear eye protection. The fuel system is under pressure and fuel could spray out when you remove any fuel system component.
- Failure to comply will result in death or serious injury.

0000009en

**CAUTION**

For maximum engine life, Yanmar recommends that when shutting the engine down, you allow the engine to idle, without load, for five minutes. This will allow the engine components that operate at high temperatures, such as the turbocharger (if equipped) and exhaust system, to cool slightly before the engine itself is shut down.

0000008en

**CAUTION**

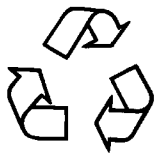

- ALWAYS be environmentally responsible.
- Follow the guidelines of the EPA or other governmental agencies for the proper disposal of hazardous materials such as engine oil, diesel fuel and engine coolant. Consult the local authorities or reclamation facility.
- NEVER dispose of hazardous materials irresponsibly by dumping them into a sewer, on the ground, or into ground water or waterways.
- Failure to follow these procedures may seriously harm the environment.

0000013en

### Replace Fuel Filter (Continued)

IDI ENGINE

Replace the fuel filter at specified intervals to prevent contaminants from adversely affecting the diesel fuel flow.

1. Stop the engine and allow it to cool.
2. Close the fuel cock of the fuel filter / water separator.
3. Turn the retaining ring **(Figure 15, (1))** to the left **(Figure 15, (5))**.

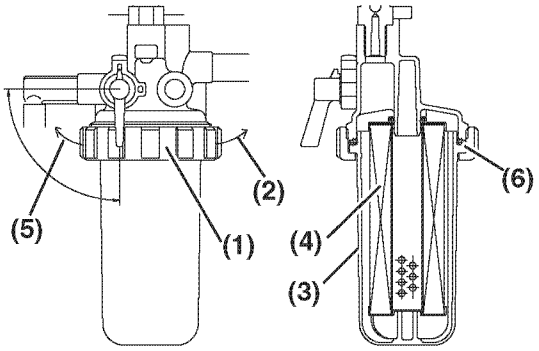


***Figure 15***

4. Carefully remove the cup **(Figure 15, (3))**. Pour the fuel into an approved container and dispose of waste properly. Hold the bottom of the cup with a shop towel to prevent the fuel from dripping. Wipe up any spills immediately.
5. Remove the fuel filter **(Figure 15, (4))** by pulling it down.
6. Replace the fuel filter with a new one.

| Applicable Fuel Filter Part No. | | |
|---|---|---|
| | Standard | Dust proof * |
| 2TNV70<br>3TNV70<br>3TNV76 | 119833-55620 | 119802-55801 |

* Consult the operation manual for the driven machine for applicability of the dust proof filter.

7. Wash the inside of the cup.
8. Check the condition of the O-ring **(Figure 15, (6))**. Replace if necessary.
9. Install the cup to the mounting flange and turn the retaining ring **(Figure 15, (1))** to the right **(Figure 15, (2))**. Hand-tighten only.
10. Open the fuel cock of the fuel filter / water separator.
11. Prime the fuel system. *See Priming the Fuel System on page 48.*
12. Check for fuel leaks.

DI ENGINE

Replace the fuel filter at specified intervals to prevent contaminants from adversely affecting the diesel fuel flow.

1. Stop the engine and allow it to cool.
2. Close the fuel cock of the fuel filter / water separator.
3. Remove the fuel filter using a filter wrench to turn it to the left **(Figure 16, (1))**. When removing the fuel filter, carefully hold it to prevent the fuel from spilling. Wipe up all spilled fuel.

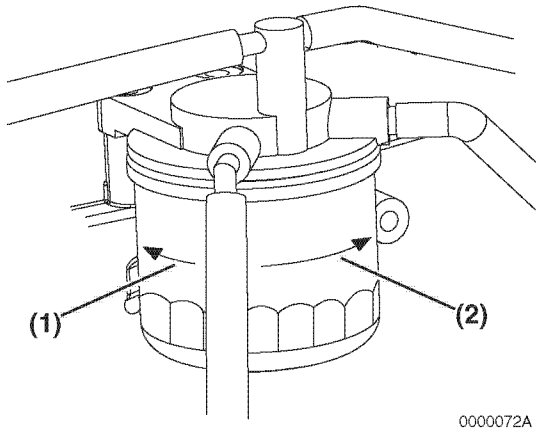


***Figure 16***

4. Clean the filter mounting surface and apply a small amount of diesel fuel to the gasket of the new fuel filter.
5. Install the new fuel filter. Hand-tighten it to the right **(Figure 16, (2))** until it comes in contact with the mounting surface. Use a filter wrench and tighten to 14-17 ft-lb (19.6-23.5 N•m, 2.0-2.4 kgf/m) or one additional turn using the filter wrench.

| Applicable Fuel Filter Part No. | | |
|---|---|---|
| | Standard | Dust proof * |
| 3TNV82A, -4TNV98 3TNV82A-B, -4TNV98-B | 119802-55801 | 129907-55801 |
| 4TNV98T, 4TNV98T-Z, -4TNV106T | 123907-55801 | |

* Consult the operation manual for the driven machine for applicability of the dust proof filter.

6. Open the fuel cock of the fuel filter / water separator.
7. Prime the fuel system. *See Priming the Fuel System on page 48.*
8. Check for fuel leaks.

## Clean Fuel Filter / Water Separator

**⚠ DANGER**

**FIRE AND EXPLOSION HAZARD!**

- **Diesel fuel is flammable and explosive under certain conditions.**
- **NEVER use diesel fuel as a cleaning agent.**
- **Failure to comply will result in death or serious injury.**

0000012en

**⚠ DANGER**

**FIRE AND EXPLOSION HAZARD!**

- **Diesel fuel is flammable and explosive under certain conditions.**
- **When you remove any fuel system component to perform maintenance (such as changing the fuel filter) place an approved container under the opening to catch the fuel.**
- **NEVER use a shop rag to catch the fuel. Vapors from the rag are flammable and explosive.**
- **Wipe up any spills immediately.**
- **Wear eye protection. The fuel system is under pressure and fuel could spray out when you remove any fuel system component.**
- **Failure to comply will result in death or serious injury.**

0000009en

**CAUTION**

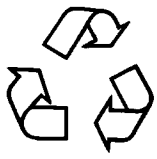

- **ALWAYS be environmentally responsible.**
- **Follow the guidelines of the EPA or other governmental agencies for the proper disposal of hazardous materials such as engine oil, diesel fuel and engine coolant. Consult the local authorities or reclamation facility.**
- **NEVER dispose of hazardous materials irresponsibly by dumping them into a sewer, on the ground, or into ground water or waterways.**
- **Failure to follow these procedures may seriously harm the environment.**

0000013en

IDI ENGINE

Periodically clean the fuel filter / water separator element and inside cup.

1. Position an approved container under the cup **(Figure 17, (1))** of the fuel filter / water separator to collect the contaminants.

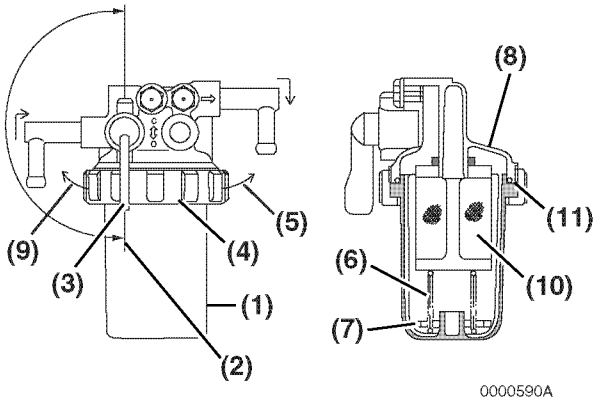


***Figure 17***

2. Close **(Figure 17, (2))** the fuel cock **(Figure 17, (3))**.
3. Turn the retaining ring **(Figure 17, (4))** to the left **(Figure 17, (9))**.
4. Carefully remove the cup **(Figure 17, (1))**. Remove the retaining spring **(Figure 17, (6))** and float **(Figure 17, (7))** from the cup. Pour the fuel into an approved container and dispose of waste properly. Hold the bottom of the cup with a shop towel to prevent the fuel from dripping. Wipe up any spills immediately.
5. Clean the inside of the cup.
6. Remove the mesh filter **(Figure 17, (10))** by pulling it down.
7. Replace the mesh filter with a new one.

| Applicable Mesh Filter Part No. | |
|---|---|
| 2TNV70<br>3TNV70<br>3TNV76 | 171081-55910 |

8. Inspect condition of the O-ring **(Figure 17, (11))**. Replace if necessary.
9. Put the float **(Figure 17, (7))** and retaining spring **(Figure 17, (6))** inside the cup.
10. Install the cup to the mounting flange **(Figure 17, (8))** and turn the retaining ring **(Figure 17, (4))** to the right **(Figure 17, (5))**. Hand-tighten only.
11. Open the fuel cock **(Figure 17, (3))**.
12. Prime the fuel system. *See Priming the Fuel System on page 48.*
13. Check for fuel leaks.

DI ENGINE

Periodically clean the fuel filter / water separator element and inside the cup.

1. Position an approved container under the cup **(Figure 18, (1))** of the fuel filter / water separator to collect the contaminants.
2. Close **(Figure 18, (2))** the fuel cock **(Figure 18, (3))**.
3. Loosen the drain cock **(Figure 18, (4))** and drain the contaminants. *See Drain Fuel Filter / Separator on page 94.*

4. Turn the retaining ring **(Figure 18, (5))** to the left **(Figure 18, (10))** and remove the cup **(Figure 18, (1))**. If equipped, disconnect the sensor wire **(Figure 18, (7))** from the cup before removing the cup.
5. Carefully hold the cup to prevent fuel from spilling. If you spill any fuel, clean up the spill completely.

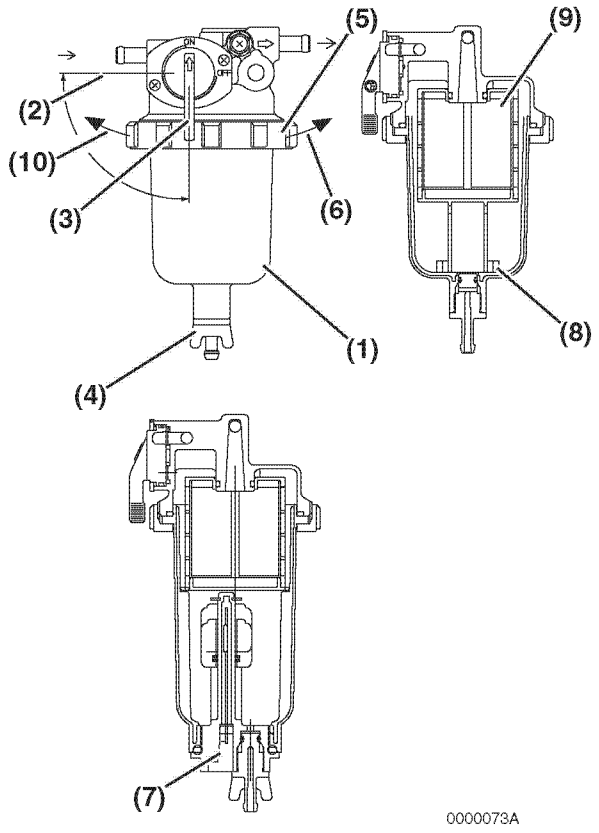


***Figure 18***

6. Remove the float ring **(Figure 18, (8))** from the cup. Pour the contaminants into the container and dispose of it properly.
7. Clean the element **(Figure 18, (9))** and inside cup. Replace the element if it is damaged.

| Applicable Element Part No. | |
|---|---|
| All Models | 119802-55710 |

8. Install the element and O-ring in the bracket.
9. Position the float ring in the cup.
10. Check the condition of the O-ring. Replace if necessary.
11. Install the cup to the bracket by tightening the retaining ring to the right **(Figure 18, (6))** to 11-15 ft-lb (15-20 N·m, 1.5-2.0 kfg/m).
12. Close the drain cock. Reconnect the sensor wire if equipped.
13. Open the fuel cock **(Figure 18, (3))**.
14. Prime the fuel system. *See Priming the Fuel System on page 48.*
15. Check for leaks.

## Every 1000 Hours of Operation

Perform the following maintenance every 1000 hours of operation.

- Drain, Flush and Refill Cooling System With New Coolant
- Adjust Intake / Exhaust Valve Clearance

### Drain, Flush and Refill Cooling System With New Coolant

**⚠ DANGER**

**SCALD HAZARD!**

- NEVER remove the radiator cap if the engine is hot. Steam and hot engine coolant will spurt out and seriously burn you. Allow the engine to cool down before you attempt to remove the radiator cap.
- Tighten the radiator cap securely after you check the radiator. Steam can spurt out during engine operation if the cap is loose.
- ALWAYS check the level of the engine coolant by observing the reserve tank.
- Failure to comply will result in death or serious injury.

0000002en

**⚠ WARNING**

**BURN HAZARD!**

- Wait until the engine cools before you drain the engine coolant. Hot engine coolant may splash and burn you.
- Failure to comply could result in death or serious injury.

0000016en

**⚠ CAUTION**

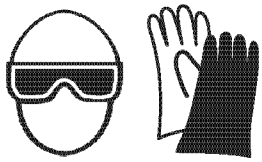

**COOLANT HAZARD!**

- Wear eye protection and rubber gloves when you handle long life or extended life engine coolant. If contact with the eyes or skin should occur, flush eyes and wash immediately with clean water.
- Failure to comply may result in minor or moderate injury.

0000005en

**CAUTION**

- **ALWAYS be environmentally responsible.**
- **Follow the guidelines of the EPA or other governmental agencies for the proper disposal of hazardous materials such as engine oil, diesel fuel and engine coolant. Consult the local authorities or reclamation facility.**
- **NEVER dispose of hazardous materials irresponsibly by dumping them into a sewer, on the ground, or into ground water or waterways.**
- **Failure to follow these procedures may seriously harm the environment.**

0000013en

Engine coolant contaminated with rust or water scale reduces the cooling effect. Even when extended life engine coolant is properly mixed, the engine coolant gets contaminated as its ingredients deteriorate. Drain, flush and refill the cooling system with new coolant every 1000 hours or once a year, whichever comes first.

1. Allow engine and coolant to cool.
2. Remove the radiator cap **(Figure 19, (1))**.
3. Remove the drain plug or open the drain cock **(Figure 19, (2))** at the bottom of the radiator and drain the engine coolant.

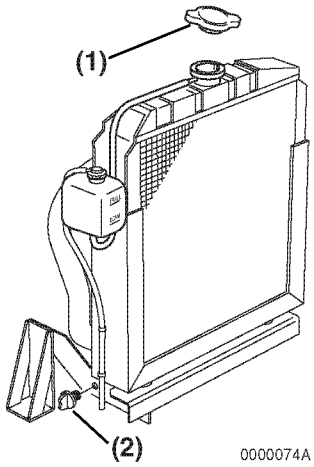


***Figure 19***

4. Drain the coolant from the engine block.
   - On models not equipped with an oil cooler, remove the coolant drain plug **(Figure 20, (1))** from the engine block.

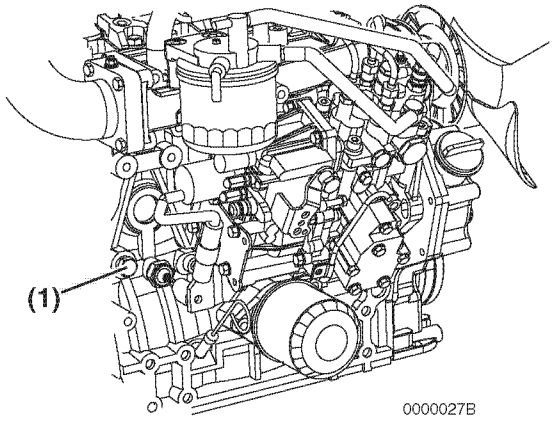


***Figure 20***

   - On models equipped with an oil cooler, remove the coolant hose **(Figure 21, (1))** at the oil cooler.

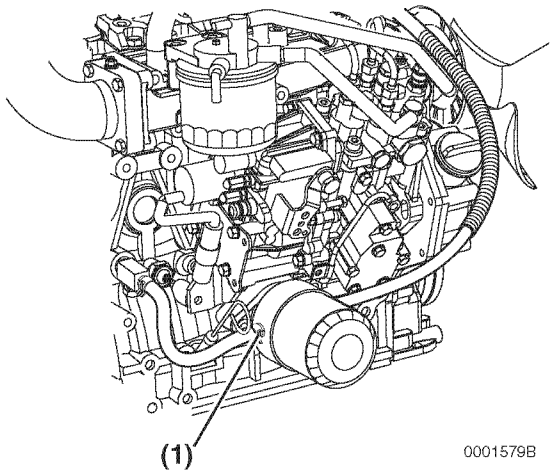


*Figure 21*

5. After draining the engine coolant, flush the radiator and engine block to remove any rust, scale and contaminants. Then reinstall and tighten the drain plug or close the drain cock in the radiator. Reinstall and tighten the engine block drain plug or reconnect the coolant hose at the oil cooler.
6. Fill radiator and engine with engine coolant. *See Filling Radiator With Engine Coolant on page 53.*

### Adjust Intake / Exhaust Valve Clearance

Proper adjustment is necessary to maintain the correct timing for opening and closing the valves. Improper adjustment will cause the engine to run noisily, resulting in poor engine performance and engine damage. See your authorized Yanmar industrial engine dealer or distributor to adjust the intake / exhaust valve clearance.

## Every 1500 Hours of Operation

Perform the following maintenance every 1500 hours of operation.

- **Inspect, Clean and Test Fuel Injectors**
- **Inspect Turbocharger (Blower Wash as Necessary) - 3TNV84T, 4TNV84T, 4TNV98T, 4TNV106T, 3TNV84T-B, 4TNV84T-Z, 4TNV98T-Z**
- **Inspect, Clean and Test EGR Valve 4TNV84T-Z, 4TNV98T-E, 4TNV98-Z, 4TNV98T-Z**
- **Inspect and Clean EGR Lead Valve 4TNV84T-Z, 4TNV98T-Z**
- **Clean EGR Cooler 4TNV84T-Z, 4TNV98T-Z**
- **Inspect Crankcase Breather System**

### Inspect, Clean and Test Fuel Injectors

**⚠ WARNING**

**HIGH-PRESSURE HAZARD!**

- **Avoid skin contact with the high-pressure diesel fuel spray caused by a fuel system leak such as a broken fuel injection line. High-pressure fuel can penetrate your skin and result in serious injury. If you are exposed to high-pressure fuel spray, obtain prompt medical treatment.**
- **NEVER check for a fuel leak with your hands. ALWAYS use a piece of wood or cardboard. Have your authorized Yanmar industrial engine dealer or distributor repair the damage.**
- **Failure to comply could result in death or serious injury.**

0000008en

Proper operation of the fuel injectors is required to obtain the optimum injection pattern for full engine performance. The EPA / ARB requires that you have the injectors inspected, cleaned and tested every 1500 hours. See your authorized Yanmar industrial engine dealer or distributor for this service.

This procedure is considered normal maintenance and is performed at the owner's expense. This procedures is not covered by the Yanmar Limited Warranty.

## Inspect Turbocharger (Blower Wash as Necessary)

**3TNV84T, 4TNV84T, 4TNV98T, 4TNV106T, 3TNV84T-Z, 4TNV84T-Z, 4TNV98T-Z**

Turbocharger service is required by the EPA / ARB every 1500 hours. Your authorized Yanmar industrial engine dealer or distributor will inspect and blower wash the unit if necessary. If you notice that the engine seems sluggish or the exhaust color is abnormal NEVER wait until the next periodic interval. Have your authorized Yanmar industrial engine dealer or distributor service the turbocharger soon.

## Inspect, Clean and Test EGR Valve

**4TNV84T-Z, 4TNV98T-E, 4TNV98-Z, 4TNV98T-Z**

The EGR valve is a key component for cleaning exhaust gas.

To prevent the valve from deteriorating in exhaust gas recirculation performance due to carbon accumulation, inspect, clean and test the valve at least every 1500 hours.

Consult your local Yanmar dealer for this service.

## Inspect and Clean EGR Lead Valve

**4TNV84T-Z, 4TNV98T-Z**

The EGR lead valve is located in the passage of recirculated gas.

To prevent carbon accumulation in or clogging of the lead valve, inspect and clean the lead valve at regular intervals.

Consult your local Yanmar dealer for this service.

## Clean EGR Cooler

**4TNV84T-Z, 4TNV98T-Z**

The EGR cooler is apt to be contaminated with rust and scale that deteriorate the cooling performance. Carbon accumulation in the exhaust gas passage of the cooler hinders circulation of exhaust gas, resulting in deterioration in exhaust gas cleanup performance.

To prevent such a problem, clean the cooler at least every 1500 hours.

Consult your local Yanmar dealer for this service.

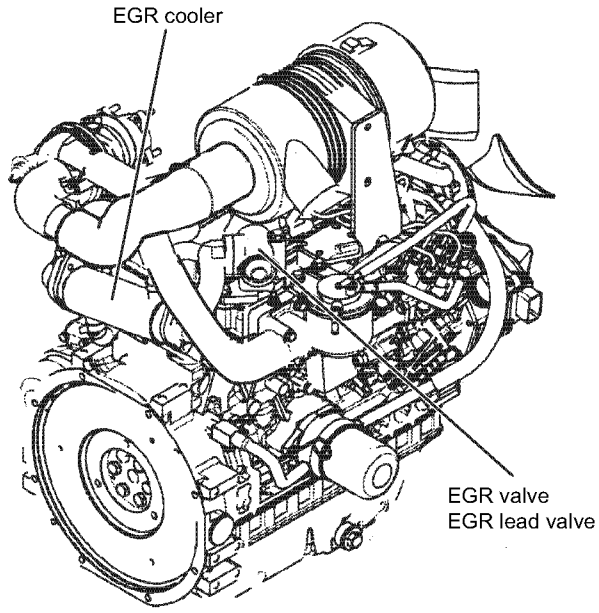


*Figure 22*

## Inspect Crankcase Breather System

Proper operation of the crankcase breather system is required to maintain the emission requirements of the engine. The EPA / ARB requires that you have the crankcase breather system inspected every 1500 hours. See your authorized Yanmar industrial engine dealer or distributor for this service.

## Every 2000 Hours of Operation

Perform the following maintenance every 2000 hours of operation.

- **Check and Replace Fuel Hoses and Engine Coolant Hoses**
- **Lap the Intake and Exhaust Valves**

### Check and Replace Fuel Hoses and Engine Coolant Hoses

**CAUTION**

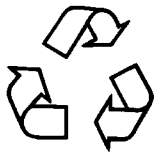

- **ALWAYS be environmentally responsible.**
- **Follow the guidelines of the EPA or other governmental agencies for the proper disposal of hazardous materials such as engine oil, diesel fuel and engine coolant. Consult the local authorities or reclamation facility.**
- **NEVER dispose of hazardous materials irresponsibly by dumping them into a sewer, on the ground, or into ground water or waterways.**
- **Failure to follow these procedures may seriously harm the environment.**

0000013en

Regularly check the fuel system and engine coolant system hoses. If they are cracked or degraded, replace them. Replace the hoses at least every two years. See your authorized Yanmar industrial engine dealer or distributor to replace fuel hoses and engine coolant system hoses.

### Lap the Intake and Exhaust Valves

Adjustment is necessary to maintain proper contact of the valves and seats. See your authorized Yanmar industrial engine dealer or distributor to lap the valve seats.

# TROUBLESHOOTING

If a problem occurs, stop the engine immediately. Refer to the SYMPTOM column in the Troubleshooting Chart to identify the problem.

**CAUTION**

**If any indicator fails to illuminate when the key switch is in the ON position, see your authorized Yanmar industrial engine dealer or distributor for service before operating the engine.**

0000028en

**CAUTION**

**If any indicator illuminates during engine operation, stop the engine immediately. Determine the cause and repair the problem before you continue to operate the engine.**

0000029en

## TROUBLESHOOTING CHART

| SYMPTOM | PROBABLE CAUSE | ACTION | REFER TO |
|---|---|---|---|
| **Indicator Turns On - Engine Running** | | | |
| Engine oil pressure indicator | Low level of engine oil | Check and adjust oil level as necessary | *Checking Engine Oil on page 50* |
| | Too high an oil level | | |
| | Clogged engine oil filter | Replace engine oil filter | *Replace Engine Oil and Engine Oil Filter on page 88* |

| SYMPTOM | PROBABLE CAUSE | ACTION | REFER TO |
|---|---|---|---|
| **Indicator Turns On - Engine Running** | | | |
| Engine coolant indicator | Low engine coolant level | Add engine coolant | *Filling Radiator With Engine Coolant on page 53* |
| | Dirty radiator fins | Clean the radiator fins | *Check and Clean Radiator Fins on page 99* |
| | Engine coolant leaking | See authorized Yanmar industrial engine dealer or distributor | — |
| | V-belt loose or damaged | Adjust V-belt or replace | *Check and Adjust Cooling Fan V-Belt on page 92* |
| | Contaminated engine coolant | See authorized Yanmar industrial engine dealer or distributor | — |
| | Faulty engine coolant pump | | — |
| Battery Indicator | V-belt loose or damaged | Adjust V-belt or replace | *Check and Adjust Cooling Fan V-Belt on page 92* |
| | Battery failure | Check battery condition | *Check Battery on page 96* |
| | Faulty alternator | See authorized Yanmar industrial engine dealer or distributor | — |
| **Indicator Does Not Turn ON - Key Switch is Turned to ON (OFF→ ON) - Engine Not Running** | | | |
| | Faulty electrical wiring or faulty indicator | See authorized Yanmar industrial engine dealer or distributor | — |
| **Indicator Stays On - Key Switch is Turned from Start to ON (START → ON) - Engine Not Running** | | | |
| Battery indicator stays ON | Faulty alternator | See authorized Yanmar industrial engine dealer or distributor | — |
| Engine oil pressure indicator stays ON | Faulty engine oil pressure switch | | — |
| | No or low level of engine oil | Check and adjust oil level as necessary | *Checking Engine Oil on page 50* |
| | Clogged engine oil filter | Replace engine oil filter | *Replace Engine Oil and Engine Oil Filter on page 88* |
| **Engine Does Not Start** | | | |
| Starter motor operates but engine does not start | No diesel fuel | Refuel and prime fuel system | *Filling the Fuel Tank on page 46* |
| | Air in fuel system | Prime fuel system | *Priming the Fuel System on page 48* |
| | Improper diesel fuel | Replace with recommended diesel fuel | *Diesel Fuel Specifications on page 44* |
| | Clogged fuel filter | Replace fuel filter | *Replace Fuel Filter on page 103* |
| | Poor fuel injection | See authorized Yanmar industrial engine dealer or distributor | — |
| | Compressed air leakage from intake / exhaust valves | | — |
| | Faulty engine stop solenoid | | — |

| SYMPTOM | PROBABLE CAUSE | ACTION | REFER TO |
|---|---|---|---|
| **Engine Does Not Start (Continued)** | | | |
| Starter motor does not operate or rotates too slowly (engine can be turned manually) | Battery needs charging | Check electrolyte, recharge | *Check Battery on page 96* |
| | Faulty cable connection at battery terminals | Clean terminals, retighten | — |
| | Faulty starter switch | See authorized Yanmar industrial engine dealer or distributor | — |
| | Faulty starter motor | | — |
| Engine cannot be manually turned | Inner parts seized or damaged | | — |
| **White or Black Exhaust Smoke** | | | |
| Black exhaust smoke | Engine overloaded | Reduce load | — |
| | Clogged air cleaner element | Clean element or replace | *Clean Air Cleaner Element on page 101* |
| | Improper diesel fuel | Replace with recommended diesel fuel | *Diesel Fuel Specifications on page 44* |
| | Faulty spraying of fuel injection | See authorized Yanmar industrial engine dealer or distributor | — |
| | Excessive intake / exhaust valve clearance | | — |
| | Faulty EGR valve | | — |
| White exhaust smoke | Improper diesel fuel | Replace with recommended diesel fuel | *Diesel Fuel Specifications on page 44* |
| | Faulty spray pattern of fuel injection | See authorized Yanmar industrial engine dealer or distributor | — |
| | Fuel injection timing delay | | — |
| | Engine burning oil | | — |

# TROUBLESHOOTING OF ELECTRONIC CONTROL SYSTEM

DI ENGINE

**4TNV84T-Z, 4TNV98-E, 4TNV98-Z, 4TNV98T-Z**

**⚠ WARNING**

- **Never use the E-ECU for other purposes than intended or in other ways than specified by Yanmar. Doing so could result in the violation of emission control regulations and will void the product warranty.**
- **Improper use or misuse of the E-ECU may result in death or serious injury due to an abrupt and unexpected increase in engine speed.**

9999999en

**⚠ WARNING**

- **Replacing the fuel injection pump involves rewriting the fuel injection data in the E-ECU.**
  **Be sure to contact your local Yanmar dealer before replacing the fuel injection pump.**
  **Failure to rewrite the fuel injection data before replacing the fuel injection pump will void the engine warranty.**
- **Improper use or misuse of the E-ECU may result in death or serious injury due to an abrupt and unexpected increase in engine speed.**

9999997en

**⚠ WARNING**

- **Replacing the E-ECU involves migrating the fuel injection data to the existing E-ECU to the new unit.**
  **Be sure to contact your local Yanmar dealer before replacing the E-ECU.**
  **Failure to migrate the fuel injection data before replacing the E-ECU will void the engine warranty.**
- **Improper use or misuse of the E-ECU may result in death or serious injury due to an abrupt and unexpected increase in engine speed.**

9999996en

## Fault Detection Capability

The E-ECU has a fault detection capability. *See TROUBLESHOOTING OF ELECTRONIC CONTROL SYSTEM on page 116.*

A fault indicator (Optional) is located on the operator's console as shown in **Figure 1**.

This indicator comes on at power up of the E-ECU and goes out after 2 sec.

Once a fault is detected, then the indicator flashes in certain patterns, providing fault information to the operator.

**CAUTION**

**Shut down the engine if the fault indicator comes on.**

**Continuing running the engine with the fault indicator being on may result in a serious malfunction of or damage to the engine, and will void the engine warranty.**

9999999en

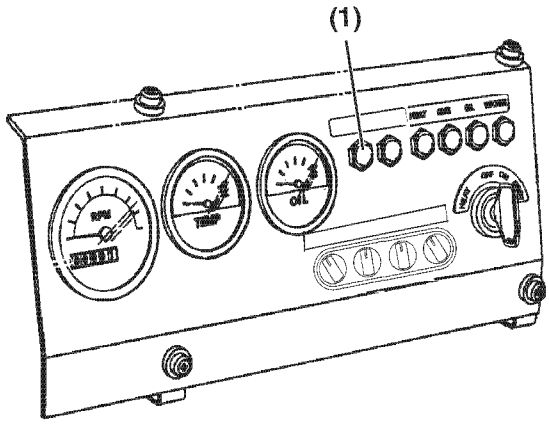


**1 – Fault indicator**

***Figure 1***

**Figure 1** Typical Operator's Console

**Figure 2** exemplifies flashing patterns that represent an accelerator fault (5 flashes) or EGR valve fault (1 to 3 flashes) occurring at power up. If multiple faults occur simultaneously, the indicator indicates all the faults in order of smaller to larger number of flashes.

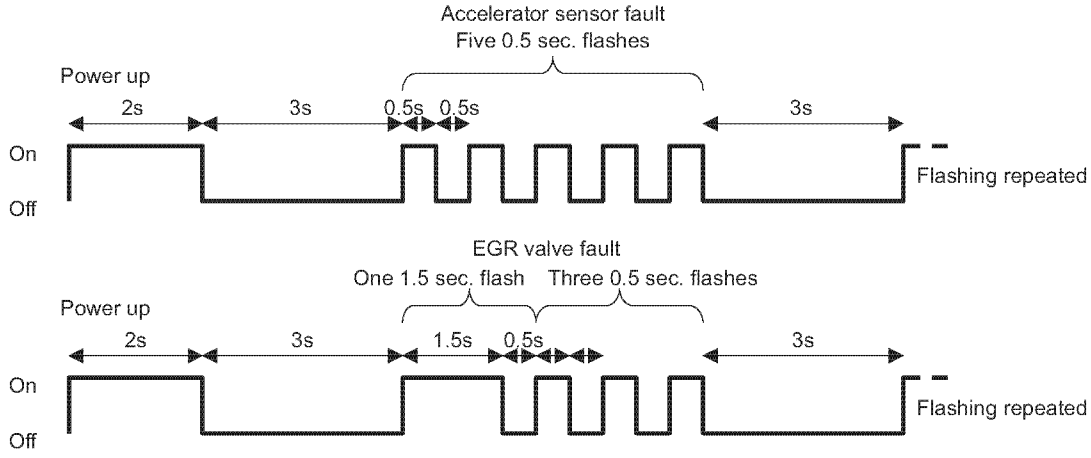


***Figure 2***

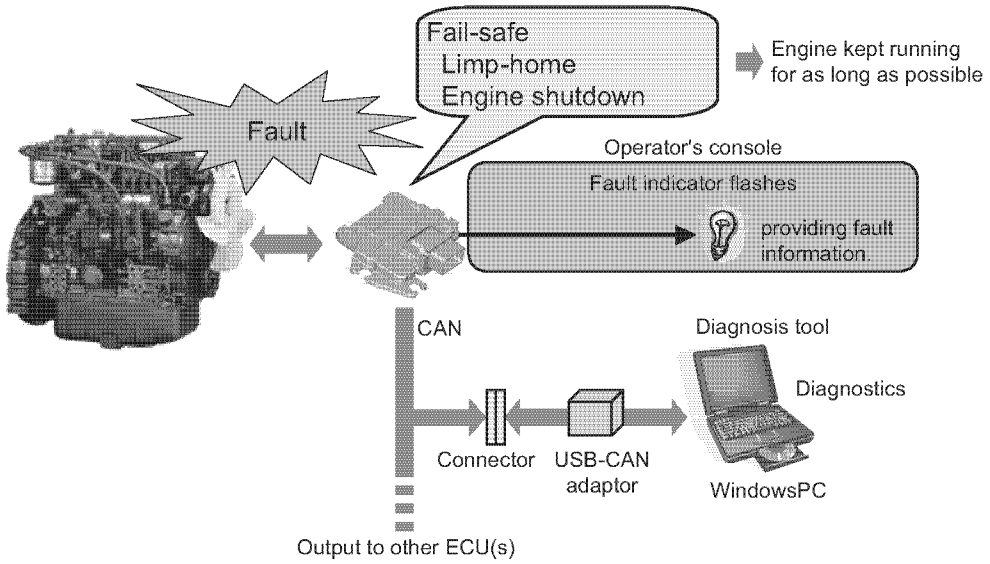


***Figure 3***

**CAUTION**

**If the fault indicator comes on, check and note the flashing pattern, shut down the engine without delay and contact your local Yanmar dealer.**

9999993en

The Yanmar genuine diagnosis tool allows reviewing detailed fault information, historical fault/alarm logs and freeze frame data, monitoring the engine status and carrying out the fault diagnosis. See **Figure 3**.

Events in the fault/alarm logs can be time stamped.

## Diagnosis Tool

A connector is provided at an end of the harness of the driven machine so that the Yanmar genuine diagnosis tool can be loaded with data from the E-ECU. See **Figure 4** and **Figure 5**.

When the fuel injection pump is replaced, data in the E-ECU must also be replaced for accommodating the new pump. When the E-ECU is replaced, the fuel injection data in the existing unit must be migrated to the new unit. The diagnosis tool can be used for the data replacement or migration. Contact your local Yanmar dealer for replacement of the fuel injection pump or E-ECU.

For operation of the diagnosis tool, see the manual for the tool.

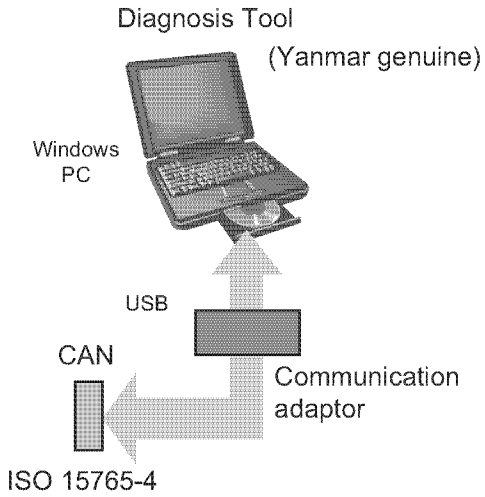


*Figure 4*

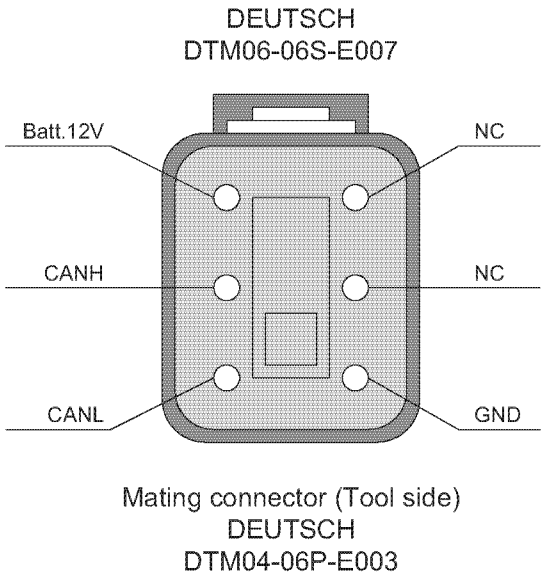


*Figure 5*

# TROUBLESHOOTING INFORMATION

If your engine does not operate properly, refer to the troubleshooting chart or consult your authorized Yanmar industrial engine dealer or distributor.

Supply the authorized Yanmar industrial engine dealer or distributor with the following information:

- Model name and serial number of your engine
- The driven machine type (tractor, generator, skid steer loader), manufacturer's name, model and serial number
- How long the engine has been in service (the number of engine hours or the number of calendar months)
- Operating conditions when problem occurs:
  - Engine RPM
  - Color of exhaust smoke
  - Type of diesel fuel
  - Type of engine oil
  - Flashing patterns of indicators (When an electronically controlled engine and the fault indicator are used)
  - Any abnormal noises or vibration
  - Operating environment such as high altitude or extreme ambient temperatures, etc.
- Engine maintenance history and previous problems
- Other factors that contribute to the problem

# LIST OF POSSIBLE FAULTS OF ELECTRONICALLY CONTROLLED ENGINES

## 4TNV84T-Z, 4TNV98-E, 4TNV98-Z, 4TNV98T-Z

| No. | Fault (alarm) location | Fault/alarm condition | Engine status | Reset condition | Availability of detection features | No. of flashes/flashing pattern of fault indicator |
|---|---|---|---|---|---|---|
| 1 | Coolant temperature sensor | Sensor voltage is over 4.8V or under 0.2V | Continues to run at a coolant temperature of 30°C. | Voltage returns to normal. | Standard | 4 |
| 2 | Accelerator sensor | Sensor voltage is over 4.8V or under 0.2V. | Continues to run at 1500 rpm. | Voltage returns to normal. | Default | 5 |
| 3 | Speed sensor | Engine start switch (E8) is on, but engine speed is zero. | Is shut down. (When optional auxiliary speed sensor is equipped:Auxiliary speed senor works in place of faulty speed sensor and engine continues to run at up to 1800 rpm. If auxiliary sensor also fails, engine is shut down. | Key switch is turned to OFF. | Standard | 6 |
| | | Engine speed momentarily decreased to lower than specified lower limit. | | | | |
| 4 | Rack position sensor | Rack position relative to rack actuator is without specified limits. | Continues to run without rack position sensing at up to 150% of low idling speed or 80% of high idling speed, whichever is lower. | Key switch is turned to OFF. | Standard | 7 |
| 5 | Rack actuator | Rack actuator output is without specified limits. | Is shut down. | Key switch is turned to OFF. | Standard | 8 |
| | | Engine accelerates even though rack actuator output is minimized. | | | | |
| | | Engine stalls while rack position sensor fails. | | | | |
| 6 | EGR valve | LOW status was detected even though port was off. | Continues to run at up to 92% of rated power output and up to 1800 rpm. | Key switch is turned to OFF. | Default | 1-3 |
| | | HIGH status was detected even though port was on. | | | | |
| 7 | CSD solenoid valve | LOW status was detected even though port was on. | Continues to run while CSD feature is canceled. | Key switch is turned to OFF. | Standard | 1-4 |
| | | HIGH status was detected even though port was off. | | | | |
| 8 | Starting aid relay | LOW status was detected even though port was off. | Continues to run while starting aid relay is off. | Key switch is turned to OFF. | Optional | 1-5 |
| | | HIGH status was detected even though port was on. | | | | |

| No. | Fault (alarm) location | Fault/alarm condition | Engine status | Reset condition | Availability of detection features | No. of flashes/flashing pattern of fault indicator |
|---|---|---|---|---|---|---|
| 9 | Main relay | Power cannot be turned off even though main relay is off. | Continues to run normally. | Relay returns to normal. This fault will persist even if key switch is turned to OFF. | Default | 1-6 |
| 10 | Rack actuator relay | LOW status was detected even though port was off.<br>HIGH status was detected even though port was on. | Is shut down. | Key switch is turned to OFF. | Standard | 1-7 |
| 11 | Oil pressure switch | Oil pressure switch is not turned on while engine is stopped. | Continues to run normally. (Other option can be selected). | Key switch is turned to OFF. | Optional | 2-1 |
| 12 | Power supply voltage | An ECU supply voltage of under 10.0V was detected.<br>An ECU supply voltage of over 16.0V was detected. | Continues to run normally. | Voltage returns to normal. | Standard | 2-3 |
| 13 | ECU temperature (alarm) | ECU temperature is over 105°C. | Continues to run normally. (Other option can be selected). | Temperature returns to normal; under 100°C (other optional setting is allowed). | Optional | 2-5 |
| 14 | Oil pressure | Oil pressure switch is not turned off while engine is running. | Continues to run normally. (Other option can be selected). | Pressure returns to normal. | Optional | 3-1 |
| 15 | Battery charge (alarm) | Battery changing switch is not turned off while engine is running. | Continues to run normally. | Key switch is turned to OFF. | Optional | 3-2 |
| 16 | Battery charging switch | Battery changing switch is not turned off while engine is running. | Continues to run normally. | Key switch is turned to OFF. | Optional | 2-2 |
| 17 | Coolant temperature (alarm) | Coolant temperature is over 110°C. | Continues to run normally. (Other option can be selected). | Temperature returns to normal; under 105°C (other optional setting is allowed). | Standard | 3-6 |

| No. | Fault (alarm) location | Fault/alarm condition | Engine status | Reset condition | Availability of detection features | No. of flashes/flashing pattern of fault indicator |
|---|---|---|---|---|---|---|
| 18 | ECU-ROM | Flash ROM checksum error occurred. | Is shut down. | Key switch is turned to OFF. | Standard | 4-1 |
| 19 | ECU-EEPROM | Reading/writing error occurred. | Continues to run normally. | | | |
| | | Checksum error occurred. | | | | |
| 21 | ECU-sub CPU | Communication with sub microcomputer failed. | Continues to run normally. | | | |
| 22 | ECU-mapping format | Mapping format is invalid. | Is shut down. | | | |
| 23 | ECU-temperature sensor | Sensor voltage is over 4.6V or under 1.0V. | Continues to run normally. | Temperature returns to normal. | | |

This Page Intentionally Left Blank

# LONG-TERM STORAGE

This section of the *Operation Manual* describes the procedures necessary to place the engine into long-term storage (six months or longer) and how to place it back into operation.

## BEFORE YOU PLACE THE ENGINE IN LONG-TERM STORAGE

**⚠ DANGER**

**EXPLOSION HAZARD!**

- **Never short out the battery terminals, including when checking the remaining battery charge. This will result in a spark and may cause an explosion or fire. Use a hydrometer to check the remaining battery charge.**
- **If the electrolyte is frozen, slowly warm the battery before you recharge it.**
- **Failure to comply will result in death or serious injury.**

0000007en

**⚠ WARNING**

**BURN HAZARD!**

- **Batteries contain sulfuric acid. NEVER allow battery fluid to come in contact with clothing, skin or eyes. Severe burns could result. ALWAYS wear safety goggles and protective clothing when servicing the battery. If battery fluid contacts the eyes and / or skin, immediately flush the affected area with a large amount of clean water and obtain prompt medical treatment.**
- **Failure to comply could result in death or serious injury.**

0000007en

**⚠ CAUTION**

**FLYING OBJECT HAZARD!**

- **ALWAYS wear eye protection when servicing the engine and when using compressed air or high-pressure water. Dust, flying debris, compressed air, pressurized water or steam may injure your eyes.**
- **Failure to comply may result in minor or moderate injury.**

0000003en

**CAUTION**

**Protect the air cleaner, turbocharger (if equipped) and electric components from damage when you use steam or high-pressure water to clean the engine.**

0000014en

Perform the next Preventive Maintenance procedure. For example, if there are 10 hours remaining before the 250 hour maintenance, you should do the maintenance before you place the engine in storage.

*See Periodic Maintenance Schedule on page 85.*

1. Flush the radiator and refill with Long Life Engine Coolant. *See Engine Coolant Specifications on page 53* for engine coolant specifications and *See Filling Radiator With Engine Coolant on page 53* for the procedure for draining and refilling the cooling system.
2. Clean the exterior of the engine so it is free of grease and oil.
3. Drain the fuel tank or make sure it is completely full. *See Filling the Fuel Tank on page 46.*
4. Lubricate exposed parts of the engine speed control system.
5. Protect the air cleaner, muffler and electrical components (alternator, starter motor, switches, EGR valve, controller) from water and dust.
6. Disconnect the negative (-) battery cable to prevent the battery from discharging.
7. Check the battery fluid and add distilled water as required. *See Check Battery on page 96.*
8. Charge the battery once a month during storage.
9. Rotate the engine without starting, every four to six months.

## RETURNING THE ENGINE TO SERVICE

1. Perform the *Daily Checks on page 55.*
2. The engine should be pre-oiled before startup. Crank the engine, leaving the fuel system shut off so the engine will not start, for 15 seconds. Then pause for 30 seconds. Repeat the procedure until you have cranked the engine for a total of one minute. This will circulate the oil in the engine's lubrication system.
3. Prime the fuel system. *See Priming the Fuel System on page 48.*
4. Start the engine. Allow the engine to idle for approximately 15 minutes while you check for:
   - Proper oil pressure
   - Fuel, engine oil, or coolant leaks
   - Proper operation of the indicators and / or gauges.
5. Avoid prolonged operation at minimum or maximum engine speeds and loads for the remainder of the first hour of operation.

# SPECIFICATIONS

## GENERAL

### Description of Model Number

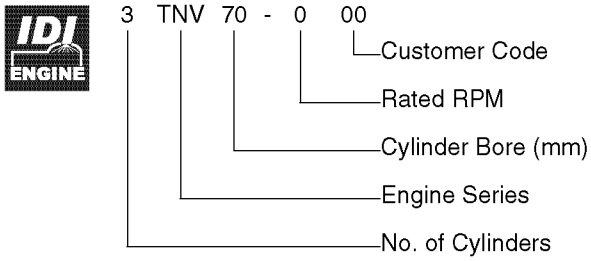


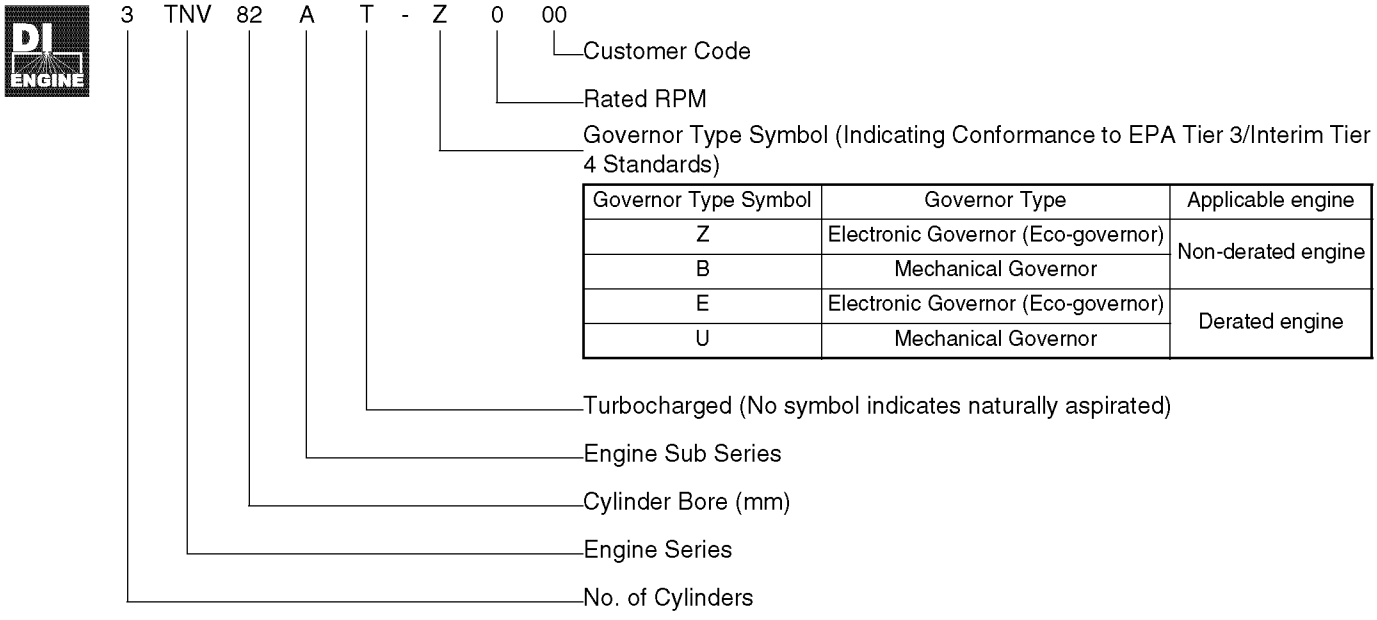


| Governor Type Symbol | Governor Type | Applicable engine |
|---|---|---|
| Z | Electronic Governor (Eco-governor) | Non-derated engine |
| B | Mechanical Governor | |
| E | Electronic Governor (Eco-governor) | Derated engine |
| U | Mechanical Governor | |

## Engine Speed Specifications

| Notation | Available Engine Speed | Intended Uses |
|---|---|---|
| VH | 3200 - 3600 RPM ($min^{-1}$) | Lawn Mower, Construction, Industrial Machine |
| VM | 2000 - 3000 RPM ($min^{-1}$) | Agricultural, Construction, Industrial Machines |
| CH | 3000 - 3600 RPM ($min^{-1}$) | 2-pole Generator Sets, Irrigation Pumps |
| CL | 1500 or 1800 RPM ($min^{-1}$) | 4-pole Generator Sets, Irrigation Pumps |

VH: Variable High Speed
VM: Variable Medium Speed
CH: Constant High Speed
CL: Constant Low Speed

## Engine General Specifications

| | | |
|---|---|---|
| Type | Vertical In-line, Water Cooled, 4-Cycle Diesel Engine | |
| Combustion System | Direct Injection Models | Direct Injection |
| | Indirect Injection Models | Swirl Chamber (Ball-Type) |
| Starting System | Electric Starting | |
| Cooling System | Radiator | |
| Lubricating System | Forced Lubrication with Trochoid Pump | |
| PTO Position | Flywheel End | |
| Direction of Rotation | Counterclockwise Viewed from Flywheel End | |

Notes:

1. The information described in *Principal Engine Specifications* is for a “standard” engine. To obtain the information for the engine installed in your driven machine, please refer to the manual provided by the driven machine manufacturer.
2. Engine rating conditions are as follows (SAE J1349, ISO 3046/1):
   - Atmospheric Condition: Room temperature 77°F (25°C), Atmospheric pressure 29.53 in. Hg (100 kPa, 750 mm Hg), Relative humidity 30%
   - Fuel Temperature at Fuel Injector Pump Inlet: 104°F (40°C)
   - Fuel Feeding Pressure: 20 ± 10 kPa (net) after engine break-in has been performed with the cooling fan, air cleaner and muffler installed to the engine.
   - With Cooling Fan, Air Cleaner, Muffler: Yanmar Standard
   - After the Engine Break-In Period. Output Allowable Deviation: ± 3%
   - 1 PS = 0.7355 kW
   - 1 hp SAE (Society of Automotive Engineers) = 0.7457 kW

# PRINCIPAL ENGINE SPECIFICATIONS

## 2TNV70 (~ EPA Tier4)

| Engine Model | | 2TNV70 | | | | | | | | | | |
|---|---|---|---|---|---|---|---|---|---|---|---|---|
| Version | | VM | | | | | | CH | | VH | | |
| Type | | Vertical In-line Diesel Engine | | | | | | | | | | |
| Combustion System | | Ball-Type Swirl Chamber | | | | | | | | | | |
| Aspiration | | Natural | | | | | | | | | | |
| No. of Cylinders | | 2 | | | | | | | | | | |
| Bore × Stroke | | 70 × 74mm | | | | | | | | | | |
| Displacement | | 0.570L | | | | | | | | | | |
| Continuous Rated Output | $min^{-1}$ | | | | | | | 3000 | 3600 | | | |
| | kW | | | | | | | 8.16 | 9.76 | | | |
| | PS | | | | | | | 11.1 | 13.3 | | | |
| Max. Rated Output (Net) | $min^{-1}$ | 2000 | 2200 | 2400 | 2600 | 2800 | 3000 | 3000 | 3600 | 3200 | 3400 | 3600 |
| | kW | 5.96 | 6.62 | 7.28 | 7.87 | 8.53 | 9.12 | 8.97 | 10.7 | 9.34 | 9.78 | 10.3 |
| | PS | 8.10 | 9.00 | 9.90 | 10.7 | 11.6 | 12.4 | 12.2 | 14.6 | 12.7 | 13.3 | 14.0 |
| High Idling | $min^{-1}$ | 2160 ± 25 | 2375 ± 25 | 2570 ± 25 | 2780 ± 25 | 2995 ± 25 | 3210 ± 25 | 3165 ± 25 | 3800 ± 25 | 3400 ± 25 | 3600 ± 25 | 3815 ± 25 |
| Engine Weight (Dry)<br>*with Flywheel Housing | | 84 kg | | | | | | | | | | |
| PTO Position | | Flywheel End | | | | | | | | | | |
| Direction of Rotation | | Counterclockwise Viewed From Flywheel End | | | | | | | | | | |
| Cooling System | | Liquid-Cooled with Radiator | | | | | | | | | | |
| Lubricating System | | Forced Lubrication with Trochoid Pump | | | | | | | | | | |
| Normal Oil Pressure at Rated Engine Speed | | 0.29 -0.44 MPa | | | | | | | | | | |
| Normal Oil Pressure at Low Idle Speed | | 0.06 MPa | | | | | | | | | | |
| Starting System | | Electric Starting - Starter Motor: DC12V, 1.0 kW*** | | | | | | | | | | |
| | | Dynamo: DC12V, 20A*** | | | | | | | | | | |
| | | Recommended Battery Capacity: 12V, 36Ah (5h rating) *** | | | | | | | | | | |
| Dimensions (L × W × H)* | | 415 × 427 × 484mm | | | | | | 415 × 427 × 504mm | | 415 × 427 × 484mm | | |
| Engine Oil Pan Capacity** | | 1.8/1.2L<br>(Dipstick Upper Limit / Lower Limit) | | | | | | 2.4/1.2L<br>(Dipstick Upper Limit / Lower Limit) | | 1.8/1.2L<br>(Dipstick Upper Limit / Lower Limit) | | |
| Engine Coolant Capacity | | 0.9L Engine Only | | | | | | | | | | |
| Standard Cooling Fan | | 260mm O.D., 5 Blade Pusher-Type *** | | | | | | | | | | |
| Crank V-pulley dia./<br>Fan V-pulley dia. | | ϕ110/ ϕ110mm *** | | | | | | | | | | |

* *Engine specifications without radiator.*

** *Engine oil capacity for a "Deep Standard" oil pan. Refer to the operation manual provided by the driven machine manufacturer for the actual engine oil capacity of your machine.*

*** *May vary depending on application.*

## 3TNV70 (~ EPA Tier4)

| Engine Model | 3TNV70 | | | | | | | | | | | | | |
|---|---|---|---|---|---|---|---|---|---|---|---|---|---|---|
| Version | CL | | | VM | | | | | | CH | | VH | | |
| Type | Vertical In-line Diesel Engine | | | | | | | | | | | | | |
| Combustion System | Ball-Type Swirl Chamber | | | | | | | | | | | | | |
| Aspiration | Natural | | | | | | | | | | | | | |
| No. of Cylinders | 3 | | | | | | | | | | | | | |
| Bore × Stroke | 70 × 74mm | | | | | | | | | | | | | |
| Displacement | 0.854 L | | | | | | | | | | | | | |
| Continuous Rated Output | $min^{-1}$ | 1500 | 1800 | | | | | | | 3000 | 3600 | | | |
| | kW | 6.09 | 7.29 | | | | | | | 8.16 | 9.76 | | | |
| | PS | 8.27 | 9.91 | | | | | | | 16.5 | 19.7 | | | |
| Max. Rated Output (Net) | $min^{-1}$ | 1500 | 1800 | 2000 | 2200 | 2400 | 2600 | 2800 | 3000 | 3000 | 3600 | 3200 | 3400 | 3600 |
| | kW | 6.69 | 8.02 | 8.97 | 9.93 | 11.0 | 11.8 | 12.8 | 13.7 | 13.3 | 16.0 | 14.0 | 14.7 | 15.4 |
| | PS | 9.10 | 10.9 | 12.2 | 13.5 | 14.9 | 16.1 | 17.4 | 18.6 | 18.1 | 21.7 | 19.0 | 20.0 | 21.0 |
| High Idling | $min^{-1}$ | 1600 ± 25 | 1895 ± 25 | 2160 ± 25 | 2375 ± 25 | 2570 ± 25 | 2780 ± 25 | 2995 ± 25 | 3210 ± 25 | 3165 ± 25 | 3800 ± 25 | 3400 ± 25 | 3600 ± 25 | 3815 ± 25 |
| Engine Weight (Dry)<br>*with Flywheel Housing | 98 kg | | | | | | | | | | | | | |
| PTO Position | Flywheel End | | | | | | | | | | | | | |
| Direction of Rotation | Counterclockwise Viewed From Flywheel End | | | | | | | | | | | | | |
| Cooling System | Liquid-Cooled with Radiator | | | | | | | | | | | | | |
| Lubricating System | Forced Lubrication with Trochoid Pump | | | | | | | | | | | | | |
| Normal Oil Pressure at Rated Engine Speed | 0.24 -0.35 MPa | | | 0.29 -0.44 MPa | | | | | | | | | | |
| Normal Oil Pressure at Low Idle Speed | 0.06 MPa | | | | | | | | | | | | | |
| Starting System | Electric Starting - Starter Motor: DC12V, 1.0 kW*** | | | | | | | | | | | | | |
| | Dynamo: DC12V, 20A*** | | | | | | | | | | | | | |
| | Recommended Battery Capacity: 12V, 36Ah*** (5h rating) | | | | | | | | | | | | | |
| Dimensions (L × W × H)* | 548 × 427 × 506 mm | | | 504 × 427 × 506 mm | | | | | | 504 × 427 × 536mm | | 504 × 427 × 506mm | | |
| Engine Oil Pan Capacity** | 2.8/1.5L<br>(Dipstick Upper Limit / Lower Limit) | | | | | | | | | 3.8/2.1L<br>(Dipstick Upper Limit / Lower Limit) | | 2.8/1.5L<br>(Dipstick Upper Limit / Lower Limit) | | |
| Engine Coolant Capacity | 0.9L Engine Only | | | | | | | | | | | | | |
| Standard Cooling Fan | 310mm O.D., 5 Blade Pusher-Type *** | | | | | | | | | | | | | |
| Crank V-pulley dia./<br>Fan V-pulley dia. | ϕ110/ ϕ100mm *** | | | | | | | | | | | | | |

* *Engine specifications without radiator.*

** *Engine oil capacity for a "Deep Standard" oil pan. Refer to the operation manual provided by the driven machine manufacturer for the actual engine oil capacity of your machine.*

*** *May vary depending on application.*

## 3TNV76 (~ EPA Tier4)

| Engine Model | 3TNV76 | | | | | | | | | | | | | | |
|---|---|---|---|---|---|---|---|---|---|---|---|---|---|---|---|
| Version | CL | | | VM | | | | | | | CH | | VH | | |
| Type | Vertical In-line Diesel Engine | | | | | | | | | | | | | | |
| Combustion System | Ball-Type Swirl Chamber | | | | | | | | | | | | | | |
| Aspiration | Natural | | | | | | | | | | | | | | |
| No. of Cylinders | 3 | | | | | | | | | | | | | | |
| Bore × Stroke | 76 × 82mm | | | | | | | | | | | | | | |
| Displacement | 1.116L | | | | | | | | | | | | | | |
| Continuous Rated Output | $min^{-1}$ | 1500 | 1800 | | | | | | | | 3000 | 3600 | | | |
| | kW | 8.2 | 9.8 | | | | | | | | 15.1 | 17.7 | | | |
| | PS | 11.1 | 13.3 | | | | | | | | 20.5 | 24.1 | | | |
| Max. Rated Output (Net) | $min^{-1}$ | 1500 | 1800 | 2000 | 2200 | 2400 | 2500 | 2600 | 2800 | 3000 | 3000 | 3600 | 3200 | 3400 | 3600 |
| | kW | 9 | 10.7 | 11.8 | 13.2 | 14.3 | 14.9 | 15.5 | 16.7 | 17.9 | 16.5 | 19.5 | 18.2 | 19.3 | 19.5 |
| | PS | 12.2 | 14.5 | 16.1 | 17.9 | 19.5 | 20.3 | 21.1 | 22.7 | 24.3 | 22.4 | 26.5 | 24.7 | 26.2 | 26.5 |
| High Idling | $min^{-1}$ | 1600 ±25 | 1900 ±25 | 2160 ±25 | 2375 ±25 | 2570 ±25 | 2675 ±25 | 2780 ±25 | 2995 ±25 | 3210 ±25 | 3200 ±25 | 3800 ±25 | 3400 ±25 | 3600 ±25 | 3815 ±25 |
| Engine Weight (Dry)<br>*with Flywheel Housing | 112kg | | | | | | | | | | | | | | |
| PTO Position | Flywheel End | | | | | | | | | | | | | | |
| Direction of Rotation | Counterclockwise Viewed From Flywheel End | | | | | | | | | | | | | | |
| Cooling System | Liquid-Cooled with Radiator | | | | | | | | | | | | | | |
| Lubricating System | Forced Lubrication with Trochoid Pump | | | | | | | | | | | | | | |
| Normal Oil Pressure at Rated Engine Speed | 0.24 -0.35 MPa | | | 0.29 -0.44 MPa | | | | | | | | | | | |
| Normal Oil Pressure at Low Idle Speed | 0.06 MPa | | | | | | | | | | | | | | |
| Starting System | Electric Starting (Starter Motor: DC12V (1.1 kW)) *** | | | | | | | | | | | | | | |
| | Alternator: DC12V, 40A*** | | | | | | | | | | | | | | |
| | Recommended Battery Capacity: 12V, 36Ah*** (5h rating) | | | | | | | | | | | | | | |
| Dimensions (L × W × H)* | 567 × 427 × 532mm | | | 523 × 427 × 532mm | | | | | | | 523 × 427 × 559mm | | 523 × 427 × 532mm | | |
| Engine Oil Pan Capacity** | 3.4/1.8L<br>(Dipstick Upper Limit / Lower Limit) | | | | | | | | | | | | | | |
| Engine Coolant Capacity | 0.9L Engine Only | | | | | | | | | | | | | | |
| Standard Cooling Fan | 335mm O.D., 6 Blade Pusher-Type *** | | | | | | | | | | | | | | |
| Crank V-pulley dia./<br>Fan V-pulley dia. | ϕ110/ ϕ100mm *** | | | | | | | | | | | | | | |

* *Engine specifications without radiator.*

** *Engine oil capacity for a "Deep Standard" oil pan. Refer to the operation manual provided by the driven machine manufacturer for the actual engine oil capacity of your machine.*

*** *May vary depending on application.*

## 3TNV82A (~ EPA Tier2)

| | | | | | | | | | |
|---|---|---|---|---|---|---|---|---|---|
| Engine Model | 3TNV82A | | | | | | | | |
| Version | CL | | | VM | | | | | |
| Type | Vertical In-line Diesel Engine | | | | | | | | |
| Combustion System | Direct Injection | | | | | | | | |
| Aspiration | Natural | | | | | | | | |
| No. of Cylinders | 3 | | | | | | | | |
| Bore × Stroke | 82 × 84mm | | | | | | | | |
| Displacement | 1.331L | | | | | | | | |
| Continuous Rated Output | $min^{-1}$ | 1500 | 1800 | | | | | | |
| | kW | 9.9 | 12.0 | | | | | | |
| | PS | 13.5 | 16.3 | | | | | | |
| Max. Rated Output (Net) | $min^{-1}$ | 1500 | 1800 | 2000 | 2200 | 2400 | 2600 | 2800 | 3000 |
| | kW | 11.0 | 13.2 | 14.6 | 16.0 | 17.5 | 19.0 | 20.4 | 21.9 |
| | PS | 14.9 | 17.9 | 19.9 | 21.8 | 23.8 | 25.8 | 27.8 | 29.8 |
| High Idling | $min^{-1}$ | 1600 ± 25 | 1895 ± 25 | 2180 ± 25 | 2375 ± 25 | 2570 ± 25 | 2780 ± 25 | 2995 ± 25 | 3180 ± 25 |
| Engine Weight (Dry) *with Flywheel Housing | 138kg | | | 128 kg | | | | | |
| PTO Position | Flywheel End | | | | | | | | |
| Direction of Rotation | Counterclockwise Viewed From Flywheel End | | | | | | | | |
| Cooling System | Liquid-Cooled with Radiator | | | | | | | | |
| Lubricating System | Forced Lubrication with Trochoid Pump | | | | | | | | |
| Normal Oil Pressure at Rated Engine Speed | 0.34 - 0.49 MPa | | | | | | | 0.39 - 0.54 MPa | |
| Normal Oil Pressure at Low Idle Speed | 0.06 MPa | | | | | | | | |
| Starting System | Electric Starting (Starter Motor: DC12V (1.2 kW)) *** | | | | | | | | |
| | Alternator: DC12V, 40A*** | | | | | | | | |
| | Recommended Battery Capacity: 12V, 55Ah*** (5h rating) | | | | | | | | |
| Dimensions (L × W × H)* | 553 × 489 × 565 mm | | | 528 × 489 × 565 mm | | | | | |
| Engine Oil Pan Capacity** | 5.5/3.6L (Dipstick Upper Limit / Lower Limit) | | | | | | | | |
| Engine Coolant Capacity | 1.8L Engine Only | | | | | | | | |
| Standard Cooling Fan | 335mm O.D., 6 Blade Pusher-Type *** | | | | | | | | |
| Crank V-pulley dia./ Fan V-pulley dia. | ϕ120/ ϕ90mm *** | | | ϕ110/ ϕ110mm *** | | | | | |

* *Engine specifications without radiator.*

** *Engine oil capacity for a "Deep Standard" oil pan. Refer to the operation manual provided by the driven machine manufacturer for the actual engine oil capacity of your machine.*

*** *May vary depending on application.*

# 3TNV84 (~ EPA Tier2)

| | | | | | | | | | |
|---|---|---|---|---|---|---|---|---|---|
| Engine Model | 3TNV84 | | | | | | | | |
| Version | CL | | | VM | | | | | |
| Type | Vertical In-line Diesel Engine | | | | | | | | |
| Combustion System | Direct Injection | | | | | | | | |
| Aspiration | Natural | | | | | | | | |
| No. of Cylinders | 3 | | | | | | | | |
| Bore × Stroke | 84 × 90mm | | | | | | | | |
| Displacement | 1.496L | | | | | | | | |
| Continuous Rated Output | $min^{-1}$ | 1500 | 1800 | | | | | | |
| | kW | 11.3 | 13.5 | | | | | | |
| | PS | 15.3 | 18.3 | | | | | | |
| Max. Rated Output (Net) | $min^{-1}$ | 1500 | 1800 | 2000 | 2200 | 2400 | 2600 | 2800 | 3000 |
| | kW | 12.4 | 14.8 | 16.4 | 18.1 | 19.7 | 21.3 | 23.0 | 24.6 |
| | PS | 16.8 | 20.1 | 22.3 | 24.6 | 26.8 | 29.0 | 31.3 | 33.5 |
| High Idling | $min^{-1}$ | 1600 ± 25 | 1895 ± 25 | 2180 ± 25 | 2400 ± 25 | 2590 ± 25 | 2810 ± 25 | 2995 ± 25 | 3210 ± 25 |
| Engine Weight (Dry) *with Flywheel Housing | 161kg | | | 155kg | | | | | |
| PTO Position | Flywheel End | | | | | | | | |
| Direction of Rotation | Counterclockwise Viewed From Flywheel End | | | | | | | | |
| Cooling System | Liquid-Cooled with Radiator | | | | | | | | |
| Lubricating System | Forced Lubrication with Trochoid Pump | | | | | | | | |
| Normal Oil Pressure at Rated Engine Speed | 0.34 - 0.49 MPa | | | 0.39 - 0.54 MPa | | | | | |
| Normal Oil Pressure at Low Idle Speed | 0.06 MPa | | | | | | | | |
| Starting System | Electric Starting (Starter Motor: DC12V (1.2 kW)) *** | | | | | | | | |
| | Alternator: DC12V, 40A*** | | | | | | | | |
| | Recommended Battery Capacity: 12V, 55 Ah*** (5h rating) | | | | | | | | |
| Dimensions (L × W × H)* | 589 × 486 × 622mm | | | 564 × 486 × 622mm | | | | | |
| Engine Oil Pan Capacity** | 6.7/3.9L (Dipstick Upper Limit / Lower Limit) | | | | | | | | |
| Engine Coolant Capacity | 2.0L Engine Only | | | | | | | | |
| Standard Cooling Fan | 335mm O.D., 6 Blade Pusher-Type *** | | | | | | | | |
| Crank V-pulley dia./ Fan V-pulley dia. | ϕ120/ ϕ90mm *** | | | ϕ110/ ϕ110mm *** | | | | | |

* *Engine specifications without radiator.*

** *Engine oil capacity for a "Deep Standard" oil pan. Refer to the operation manual provided by the driven machine manufacturer for the actual engine oil capacity of your machine.*

*** *May vary depending on application.*

## 3TNV84T (~ EPA Tier2)

| | | | | | | | |
|---|---|---|---|---|---|---|---|
| Engine Model | 3TNV84T | | | | | | |
| Version | CL | | | VM | | | |
| Type | Vertical In-line Diesel Engine | | | | | | |
| Combustion System | Direct Injection | | | | | | |
| Aspiration | Turbocharged | | | | | | |
| No. of Cylinders | 3 | | | | | | |
| Bore × Stroke | 84 × 90mm | | | | | | |
| Displacement | 1.496L | | | | | | |
| Continuous Rated Output | $min^{-1}$ | 1500 | 1800 | | | | |
| | kW | 14.0 | 16.5 | | | | |
| | PS | 19.0 | 22.5 | | | | |
| Max. Rated Output (Net) | $min^{-1}$ | 1500 | 1800 | 2400 | 2600 | 2800 | 3000 |
| | kW | 15.8 | 18.8 | 25.0 | 26.8 | 29.1 | 30.9 |
| | PS | 21.5 | 25.5 | 34.0 | 36.5 | 39.5 | 42.0 |
| High Idling | $min^{-1}$ | 1600 ± 25 | 1895 ± 25 | 2590 ± 25 | 2810 ± 25 | 2995 ± 25 | 3210 ± 25 |
| Engine Weight (Dry) *with Flywheel Housing | 161 kg | | | 155 kg | | | |
| PTO Position | Flywheel End | | | | | | |
| Direction of Rotation | Counterclockwise Viewed From Flywheel End | | | | | | |
| Cooling System | Liquid-Cooled with Radiator | | | | | | |
| Lubricating System | Forced Lubrication with Trochoid Pump | | | | | | |
| Normal Oil Pressure at Rated Engine Speed | 0.29 - 0.44 MPa | | | 0.34 - 0.49 MPa | | 0.39 - 0.54 MPa | |
| Normal Oil Pressure at Low Idle Speed | 0.06 MPa | | | | | | |
| Starting System | Electric Starting (Starter Motor: DC12V (1.2 kW)) *** | | | | | | |
| | Alternator: DC12V, 40A*** | | | | | | |
| | Recommended Battery Capacity: 12V,55 Ah*** (5h rating) | | | | | | |
| Dimensions (L × W × H)* | 589 × 486 × 622mm | | | 564 × 486 × 622mm | | | |
| Engine Oil Pan Capacity** | 6.7/3.9L (Dipstick Upper Limit / Lower Limit) | | | | | | |
| Engine Coolant Capacity | 2.0L Engine Only | | | | | | |
| Standard Cooling Fan | 350mm O.D., 6 Blade Pusher-Type *** | | | | | | |
| Crank V-pulley dia./ Fan V-pulley dia. | ϕ120/ ϕ90mm *** | | | ϕ110/ ϕ110mm *** | | | |

* *Engine specifications without radiator.*

** *Engine oil capacity for a "Deep Standard" oil pan. Refer to the operation manual provided by the driven machine manufacturer for the actual engine oil capacity of your machine.*

*** *May vary depending on application.*

## 3TNV88 (~ EPA Tier2)

| | | | | | | | | | |
|---|---|---|---|---|---|---|---|---|---|
| Engine Model | 3TNV88 | | | | | | | | |
| Version | CL | | | VM | | | | | |
| Type | Vertical In-line Diesel Engine | | | | | | | | |
| Combustion System | Direct Injection | | | | | | | | |
| Aspiration | Natural | | | | | | | | |
| No. of Cylinders | 3 | | | | | | | | |
| Bore × Stroke | 88 × 90mm | | | | | | | | |
| Displacement | 1.642L | | | | | | | | |
| Continuous Rated Output | $min^{-1}$ | 1500 | 1800 | | | | | | |
| | kW | 12.3 | 14.8 | | | | | | |
| | PS | 16.7 | 20.1 | | | | | | |
| Max. Rated Output (Net) | $min^{-1}$ | 1500 | 1800 | 2000 | 2200 | 2400 | 2600 | 2800 | 3000 |
| | kW | 13.5 | 16.3 | 18.0 | 19.9 | 21.6 | 23.5 | 25.2 | 27.1 |
| | PS | 18.4 | 22.1 | 24.5 | 27.0 | 29.4 | 31.9 | 34.2 | 36.8 |
| High Idling | $min^{-1}$ | 1600 ± 25 | 1895 ± 25 | 2180 ± 25 | 2400 ± 25 | 2590 ± 25 | 2810 ± 25 | 2995 ± 25 | 3210 ± 25 |
| Engine Weight (Dry) *with Flywheel Housing | 161kg | | | 155kg | | | | | |
| PTO Position | Flywheel End | | | | | | | | |
| Direction of Rotation | Counterclockwise Viewed From Flywheel End | | | | | | | | |
| Cooling System | Liquid-Cooled with Radiator | | | | | | | | |
| Lubricating System | Forced Lubrication with Trochoid Pump | | | | | | | | |
| Normal Oil Pressure at Rated Engine Speed | 0.34 - 0.49 MPa | | | 0.39 - 0.54 MPa | | | | | |
| Normal Oil Pressure at Low Idle Speed | 0.06 MPa | | | | | | | | |
| Starting System | Electric Starting (Starter Motor: DC12V (1.2 kW)) *** | | | | | | | | |
| | Alternator: DC12V, 40A*** | | | | | | | | |
| | Recommended Battery Capacity: 12V, 55Ah *** (5h rating) | | | | | | | | |
| Dimensions (L × W × H)* | 589 × 486 × 622mm | | | 564 × 486 × 622mm | | | | | |
| Engine Oil Pan Capacity** | 6.7/3.9L (Dipstick Upper Limit / Lower Limit) | | | | | | | | |
| Engine Coolant Capacity | 2.0L Engine Only | | | | | | | | |
| Standard Cooling Fan | 335mm O.D., 6 Blade Pusher-Type *** | | | | | | | | |
| Crank V-pulley dia./ Fan V-pulley dia. | ϕ120/ ϕ90mm *** | | | ϕ110/ ϕ110mm *** | | | | | |

* *Engine specifications without radiator.*

** *Engine oil capacity for a "Deep Standard" oil pan. Refer to the operation manual provided by the driven machine manufacturer for the actual engine oil capacity of your machine.*

*** *May vary depending on application.*

## 4TNV84 (~ EPA Tier2)

| | | | | | | | | | |
|---|---|---|---|---|---|---|---|---|---|
| Engine Model | 4TNV84 | | | | | | | | |
| Version | CL | | | VM | | | | | |
| Type | Vertical In-line Diesel Engine | | | | | | | | |
| Combustion System | Direct Injection | | | | | | | | |
| Aspiration | Natural | | | | | | | | |
| No. of Cylinders | 4 | | | | | | | | |
| Bore × Stroke | 84 × 90mm | | | | | | | | |
| Displacement | 1.995L | | | | | | | | |
| Continuous Rated Output | $min^{-1}$ | 1500 | 1800 | | | | | | |
| | kW | 14.9 | 17.7 | | | | | | |
| | PS | 20.3 | 24.1 | | | | | | |
| Max. Rated Output (Net) | $min^{-1}$ | 1500 | 1800 | 2000 | 2200 | 2400 | 2600 | 2800 | 3000 |
| | kW | 16.4 | 19.5 | 21.9 | 24.1 | 26.3 | 28.5 | 30.7 | 32.9 |
| | PS | 22.3 | 26.5 | 29.8 | 32.8 | 35.8 | 38.7 | 41.7 | 44.7 |
| High Idling | $min^{-1}$ | 1600 ± 25 | 1895 ± 25 | 2180 ± 25 | 2400 ± 25 | 2590 ± 25 | 2810 ± 25 | 2995 ± 25 | 3210 ± 25 |
| Engine Weight (Dry) *with Flywheel Housing | 183kg | | | 170kg | | | | | |
| PTO Position | Flywheel End | | | | | | | | |
| Direction of Rotation | Counterclockwise Viewed From Flywheel End | | | | | | | | |
| Cooling System | Liquid-Cooled with Radiator | | | | | | | | |
| Lubricating System | Forced Lubrication with Trochoid Pump | | | | | | | | |
| Normal Oil Pressure at Rated Engine Speed | 0.34 - 0.49 MPa | | | 0.39 - 0.54 MPa | | | | | |
| Normal Oil Pressure at Low Idle Speed | 0.06 MPa | | | | | | | | |
| Starting System | Electric Starting (Starter Motor: DC12V (1.4 kW)) *** | | | | | | | | |
| | Alternator: DC12V, 40A*** | | | | | | | | |
| | Recommended Battery Capacity: 12V, 64Ah*** (5h rating) | | | | | | | | |
| Dimensions (L × W × H)* | 683 × 498.5 × 617 mm | | | 658 × 498.5 × 617mm | | | | | |
| Engine Oil Pan Capacity** | 7.4/4.0L (Dipstick Upper Limit / Lower Limit) | | | | | | | | |
| Engine Coolant Capacity | 2.7L Engine Only | | | | | | | | |
| Standard Cooling Fan | 370mm O.D., 6 Blade Pusher-Type *** | | | | | | | | |
| Crank V-pulley dia./ Fan V-pulley dia. | ϕ120/ ϕ90mm *** | | | ϕ110/ ϕ110mm *** | | | | | |

* *Engine specifications without radiator.*

** *Engine oil capacity for a "Deep Standard" oil pan. Refer to the operation manual provided by the driven machine manufacturer for the actual engine oil capacity of your machine.*

*** *May vary depending on application.*

# 4TNV84T (~ EPA Tier2)

| | | | | | | | | | |
|---|---|---|---|---|---|---|---|---|---|
| Engine Model | 4TNV84T | | | | | | | | |
| Version | CL | | | VM | | | | | |
| Type | Vertical In-line Diesel Engine | | | | | | | | |
| Combustion System | Direct Injection | | | | | | | | |
| Aspiration | Turbocharged | | | | | | | | |
| No. of Cylinders | 4 | | | | | | | | |
| Bore × Stroke | 84 × 90mm | | | | | | | | |
| Displacement | 1.995L | | | | | | | | |
| Continuous Rated Output | $min^{-1}$ | 1500 | 1800 | | | | | | |
| | kW | 19.1 | 24.3 | | | | | | |
| | PS | 26.0 | 33.0 | | | | | | |
| Max. Rated Output (Net) | $min^{-1}$ | 1500 | 1800 | 2000 | 2200 | 2400 | 2600 | 2800 | 3000 |
| | kW | 21.3 | 26.9 | 27.9 | 30.5 | 33.5 | 35.7 | 38.6 | 41.2 |
| | PS | 29.0 | 36.5 | 38.0 | 41.5 | 45.5 | 48.5 | 52.5 | 56.0 |
| High Idling | $min^{-1}$ | 1600 ± 25 | 1895 ± 25 | 2180 ± 25 | 2400 ± 25 | 2590 ± 25 | 2810 ± 25 | 2995 ± 25 | 3210 ± 25 |
| Engine Weight (Dry) *with Flywheel Housing | 183 kg | | | 170 kg | | | | | |
| PTO Position | Flywheel End | | | | | | | | |
| Direction of Rotation | Counterclockwise Viewed From Flywheel End | | | | | | | | |
| Cooling System | Liquid-Cooled with Radiator | | | | | | | | |
| Lubricating System | Forced Lubrication with Trochoid Pump | | | | | | | | |
| Normal Oil Pressure at Rated Engine Speed | 0.29 - 0.44 MPa | | | 0.36 - 0.5 MPa | | | | | |
| Normal Oil Pressure at Low Idle Speed | 0.06 MPa | | | | | | | | |
| Starting System | Electric Starting (Starter Motor: DC12V (1.4 kW)) *** | | | | | | | | |
| | Alternator: DC12V, 40A*** | | | | | | | | |
| | Recommended Battery Capacity: 12V, 64 Ah*** (5h rating) | | | | | | | | |
| Dimensions (L × W × H)* | 683 × 498.5 × 713 mm | | | 649 × 498.5 × 713 mm | | | | | |
| Engine Oil Pan Capacity** | 7.4/4.0L (Dipstick Upper Limit / Lower Limit) | | | | | | | | |
| Engine Coolant Capacity | 2.7L Engine Only | | | | | | | | |
| Standard Cooling Fan | 370mm O.D., 6 Blade Pusher-Type *** | | | | | | | | |
| Crank V-pulley dia./ Fan V-pulley dia. | ϕ120/ ϕ90mm *** | | | ϕ110/ ϕ110mm *** | | | | | |

* *Engine specifications without radiator.*

** *Engine oil capacity for a "Deep Standard" oil pan. Refer to the operation manual provided by the driven machine manufacturer for the actual engine oil capacity of your machine.*

*** *May vary depending on application.*

## 4TNV88 (~ EPA Tier2)

| | | | | | | | | | |
|---|---|---|---|---|---|---|---|---|---|
| Engine Model | 4TNV88 | | | | | | | | |
| Version | CL | | | VM | | | | | |
| Type | Vertical In-line Diesel Engine | | | | | | | | |
| Combustion System | Direct Injection | | | | | | | | |
| Aspiration | Natural | | | | | | | | |
| No. of Cylinders | 4 | | | | | | | | |
| Bore × Stroke | 88 × 90mm | | | | | | | | |
| Displacement | 2.190L | | | | | | | | |
| Continuous Rated Output | $min^{-1}$ | 1500 | 1800 | | | | | | |
| | kW | 16.4 | 19.6 | | | | | | |
| | PS | 22.3 | 26.7 | | | | | | |
| Max. Rated Output (Net) | $min^{-1}$ | 1500 | 1800 | 2000 | 2200 | 2400 | 2600 | 2800 | 3000 |
| | kW | 18.0 | 21.6 | 24.1 | 26.5 | 28.8 | 31.3 | 33.7 | 35.4 |
| | PS | 24.5 | 29.4 | 32.7 | 36.0 | 39.2 | 42.5 | 45.8 | 48.1 |
| High Idling | $min^{-1}$ | 1600 ± 25 | 1895 ± 25 | 2180 ± 25 | 2400 ± 25 | 2590 ± 25 | 2810 ± 25 | 2995 ± 25 | 3210 ± 25 |
| Engine Weight (Dry) *with Flywheel Housing | 183 kg | | | 170 kg | | | | | |
| PTO Position | Flywheel End | | | | | | | | |
| Direction of Rotation | Counterclockwise Viewed From Flywheel End | | | | | | | | |
| Cooling System | Liquid-Cooled with Radiator | | | | | | | | |
| Lubricating System | Forced Lubrication with Trochoid Pump | | | | | | | | |
| Normal Oil Pressure at Rated Engine Speed | 0.34 - 0.49 MPa | | | 0.39 - 0.54 MPa | | | | | |
| Normal Oil Pressure at Low Idle Speed | 0.06 MPa | | | | | | | | |
| Starting System | Electric Starting (Starter Motor: DC12V (1.4 kW)) *** | | | | | | | | |
| | Alternator: DC12V, 40A*** | | | | | | | | |
| | Recommended Battery Capacity: 12V, 64 Ah*** (5h rating) *** | | | | | | | | |
| Dimensions (L × W × H)* | 683 × 498.5 × 618 mm | | | 658 × 498.5 × 618 mm | | | | | |
| Engine Oil Pan Capacity** | 7.4 / 4.0 L (Dipstick Upper Limit / Lower Limit) | | | | | | | | |
| Engine Coolant Capacity | 2.7L Engine Only | | | | | | | | |
| Standard Cooling Fan | 370mm O.D., 6 Blade Pusher-Type *** | | | | | | | | |
| Crank V-pulley dia./ Fan V-pulley dia. | ϕ120/ ϕ90mm *** | | | ϕ110/ ϕ110mm *** | | | | | |

* *Engine specifications without radiator.*

** *Engine oil capacity for a "Deep Standard" oil pan. Refer to the operation manual provided by the driven machine manufacturer for the actual engine oil capacity of your machine.*

*** *May vary depending on application.*

# 4TNV94L (~ EPA Tier2)

| | | | | | | | |
|---|---|---|---|---|---|---|---|
| Engine Model | 4TNV94L | | | | | | |
| Version | CL | | | VM | | | |
| Type | Vertical In-line Diesel Engine | | | | | | |
| Combustion System | Direct Injection | | | | | | |
| Aspiration | Natural | | | | | | |
| No. of Cylinders | 4 | | | | | | |
| Bore × Stroke | 94 × 110mm | | | | | | |
| Displacement | 3.054L | | | | | | |
| Continuous Rated Output | $min^{-1}$ | 1500 | 1800 | | | | |
| | kW | 26.1 | 31.3 | | | | |
| | PS | 35.5 | 42.5 | | | | |
| Max. Rated Output (Net) | $min^{-1}$ | 1500 | 1800 | 2000 | 2200 | 2400 | 2500 |
| | kW | 29.1 | 34.6 | 35.3 | 38.2 | 41.6 | 43.0 |
| | PS | 39.5 | 47.0 | 48.0 | 52.0 | 56.5 | 58.5 |
| High Idling | $min^{-1}$ | 1600 ± 25 | 1895 ± 25 | 2180 ± 25 | 2400 ± 25 | 2590 ± 25 | 2700 ± 25 |
| Engine Weight (Dry)<br>*with Flywheel Housing | 245 kg | | | 235 kg | | | |
| PTO Position | Flywheel End | | | | | | |
| Direction of Rotation | Counterclockwise Viewed From Flywheel End | | | | | | |
| Cooling System | Liquid-Cooled with Radiator | | | | | | |
| Lubricating System | Forced Lubrication with Trochoid Pump | | | | | | |
| Normal Oil Pressure at Rated Engine Speed | 0.29 - 0.39 MPa | | | | | | |
| Normal Oil Pressure at Low Idle Speed | 0.06 MPa | | | | | | |
| Starting System | Electric Starting (Starter Motor: DC12V (2.3 kW)) *** | | | | | | |
| | Alternator: DC12V, 40A*** | | | | | | |
| | Recommended Battery Capacity: 12V, 64Ah*** (5h rating) | | | | | | |
| Dimensions (L × W × H)* | 719 × 498 × 742 mm | | | | | | |
| Engine Oil Pan Capacity** | 10.5/6.0L<br>(Dipstick Upper Limit / Lower Limit) | | | | | | |
| Engine Coolant Capacity | 4.2L Engine Only | | | | | | |
| Standard Cooling Fan | 410mm O.D., 6 Blade Pusher-Type *** | | | | | | |
| Crank V-pulley dia./<br>Fan V-pulley dia. | ϕ130/ ϕ130mm *** | | | | | | |

* *Engine specifications without radiator.*

** *Engine oil capacity for a "Deep Standard" oil pan. Refer to the operation manual provided by the driven machine manufacturer for the actual engine oil capacity of your machine.*

*** *May vary depending on application.*

## 4TNV98 (~ EPA Tier2)

| | | | | | | | |
|---|---|---|---|---|---|---|---|
| Engine Model | 4TNV98 | | | | | | |
| Version | CL | | | VM | | | |
| Type | Vertical In-line Diesel Engine | | | | | | |
| Combustion System | Direct Injection | | | | | | |
| Aspiration | Natural | | | | | | |
| No. of Cylinders | 4 | | | | | | |
| Bore × Stroke | 98 × 110mm | | | | | | |
| Displacement | 3.319L | | | | | | |
| Continuous Rated Output | $min^{-1}$ | 1500 | 1800 | | | | |
| | kW | 30.9 | 36.8 | | | | |
| | PS | 42.0 | 50.0 | | | | |
| Max. Rated Output (Net) | $min^{-1}$ | 1500 | 1800 | 2000 | 2200 | 2400 | 2500 |
| | kW | 34.6 | 41.2 | 41.9 | 45.6 | 49.3 | 51.1 |
| | PS | 47.0 | 56.0 | 57.0 | 62.0 | 67.0 | 69.5 |
| High Idling | $min^{-1}$ | 1600 ± 25 | 1895 ±25 | 2180 ± 25 | 2400 ± 25 | 2590 ± 25 | 2700 ± 25 |
| Engine Weight (Dry)<br>*with Flywheel Housing | 248 kg | | | 235 kg | | | |
| PTO Position | Flywheel End | | | | | | |
| Direction of Rotation | Counterclockwise Viewed From Flywheel End | | | | | | |
| Cooling System | Liquid-Cooled with Radiator | | | | | | |
| Lubricating System | Forced Lubrication with Trochoid Pump | | | | | | |
| Normal Oil Pressure at Rated Engine Speed | 0.29 - 0.39 MPa | | | | | | |
| Normal Oil Pressure at Low Idle Speed | 0.06 MPa | | | | | | |
| Starting System | Electric Starting (Starter Motor: DC12V (2.3 kW)) *** | | | | | | |
| | Alternator: DC12V, 40A*** | | | | | | |
| | Recommended Battery Capacity: 12V, 64Ah*** (5h rating) | | | | | | |
| Dimensions (L × W × H)* | 719 × 498 × 742 mm | | | | | | |
| Engine Oil Pan Capacity** | 10.5/6.0L<br>(Dipstick Upper Limit / Lower Limit) | | | | | | |
| Engine Coolant Capacity | 4.2L Engine Only | | | | | | |
| Standard Cooling Fan | 410mm O.D., 6 Blade Pusher-Type *** | | | | | | |
| Crank V-pulley dia./<br>Fan V-pulley dia. | ϕ130/ ϕ130mm *** | | | | | | |

* *Engine specifications without radiator.*

** *Engine oil capacity for a "Deep Standard" oil pan. Refer to the operation manual provided by the driven machine manufacturer for the actual engine oil capacity of your machine.*

*** *May vary depending on application.*

# 4TNV98T (~ EPA Tier2)

| | | | | | | | |
|---|---|---|---|---|---|---|---|
| Engine Model | 4TNV98T | | | | | | |
| Version | CL | | | VM | | | |
| Type | Vertical In-line Diesel Engine | | | | | | |
| Combustion System | Direct Injection | | | | | | |
| Aspiration | Turbocharged | | | | | | |
| No. of Cylinders | 4 | | | | | | |
| Bore × Stroke | 98 × 110mm | | | | | | |
| Displacement | 3.319L | | | | | | |
| Continuous Rated Output | $min^{-1}$ | 1500 | 1800 | | | | |
| | kW | 37.9 | 45.6 | | | | |
| | PS | 51.5 | 62.0 | | | | |
| Max. Rated Output (Net) | $min^{-1}$ | 1500 | 1800 | 2000 | 2200 | 2400 | 2500 |
| | kW | 41.9 | 50.4 | 50.7 | 55.5 | 60.3 | 62.5 |
| | PS | 57.0 | 68.5 | 69.0 | 75.5 | 82.0 | 85.0 |
| High Idling | $min^{-1}$ | 1600 ± 25 | 1895 ± 25 | 2180 ± 25 | 2400 ± 25 | 2590 ± 25 | 2700 ± 25 |
| Engine Weight (Dry)<br>*with Flywheel Housing | 258 kg | | | 245 kg | | | |
| PTO Position | Flywheel End | | | | | | |
| Direction of Rotation | Counterclockwise Viewed From Flywheel End | | | | | | |
| Cooling System | Liquid-Cooled with Radiator | | | | | | |
| Lubricating System | Forced Lubrication with Trochoid Pump | | | | | | |
| Normal Oil Pressure at Rated Engine Speed | 0.29 - 0.39 MPa | | | | | | |
| Normal Oil Pressure at Low Idle Speed | 0.06 MPa | | | | | | |
| Starting System | Electric Starting (Starter Motor: DC12V (2.3 kW)) *** | | | | | | |
| | Alternator: DC12V, 40A*** | | | | | | |
| | Recommended Battery Capacity: 12V, 64Ah *** | | | | | | |
| Dimensions (L × W × H)* | 719 × 575 × 804mm | | | | | | |
| Engine Oil Pan Capacity** | 10.5/6.0L<br>(Dipstick Upper Limit / Lower Limit) | | | | | | |
| Engine Coolant Capacity | 4.2L Engine Only | | | | | | |
| Standard Cooling Fan | 430mm O.D., 8 Blade Suction-Type *** | | | | | | |
| Crank V-pulley dia./<br>Fan V-pulley dia. | ϕ130/ ϕ130mm *** | | | | | | |

* *Engine specifications without radiator.*

** *Engine oil capacity for a "Deep Standard" oil pan. Refer to the operation manual provided by the driven machine manufacturer for the actual engine oil capacity of your machine.*

*** *May vary depending on application.*

## 4TNV106 (~ EPA Tier2)

| | | | | | | | |
|---|---|---|---|---|---|---|---|
| Engine Model | 4TNV106 | | | | | | |
| Version | CL | | | VM | | | |
| Type | Vertical In-line Diesel Engine | | | | | | |
| Combustion System | Direct Injection | | | | | | |
| Aspiration | Natural | | | | | | |
| No. of Cylinders | 4 | | | | | | |
| Bore × Stroke | 106 × 125mm | | | | | | |
| Displacement | 4.412L | | | | | | |
| Continuous Rated Output | $min^{-1}$ | 1500 | 1800 | | | | |
| | kW | 41.2 | 49.3 | | | | |
| | PS | 56.0 | 67.0 | | | | |
| Max. Rated Output (Net) | $min^{-1}$ | 1500 | 1800 | 2000 | 2200 | 2400 | 2500 |
| | kW | 45.6 | 54.4 | 56.6 | 61.4 | 65.5 | 67.7 |
| | PS | 62.0 | 74.0 | 77.0 | 83.5 | 89.0 | 92.0 |
| High Idling | $min^{-1}$ | 1600 ± 25 | 1895 ± 25 | 2205 ± 25 | 2420 ± 25 | 2615 ± 25 | 2725 ± 25 |
| Engine Weight (Dry)<br>*with Flywheel Housing | 345kg | | | 330kg | | | |
| PTO Position | Flywheel End | | | | | | |
| Direction of Rotation | Counterclockwise Viewed From Flywheel End | | | | | | |
| Cooling System | Liquid-Cooled with Radiator | | | | | | |
| Lubricating System | Forced Lubrication with Trochoid Pump | | | | | | |
| Normal Oil Pressure at Rated Engine Speed | 0.31 - 0.49 MPa | | | With balancer: 0.34-0.44 MPa<br>Without balancer: 0.39-0.49 MPa | | | |
| Normal Oil Pressure at Low Idle Speed | 0.06 MPa | | | | | | |
| Starting System | Electric Starting (Starter Motor: DC12V (3.0 kW)) *** | | | | | | |
| | Alternator: DC12V, 55A*** | | | | | | |
| | Recommended Battery Capacity: 12V, 88 Ah*** | | | | | | |
| Dimensions (L × W × H)* | 808 × 629 × 803 mm | | | 776 × 629 × 803 mm | | | |
| Engine Oil Pan Capacity** | 14.0/5.0L<br>(Dipstick Upper Limit / Lower Limit) | | | 14.0/6.5L<br>(Dipstick Upper Limit / Lower Limit) | | | |
| Engine Coolant Capacity | 6L Engine Only | | | | | | |
| Standard Cooling Fan | 500mm O.D. 7 Blade Pusher-Type *** | | | 500mm O.D. 7 Blade Suction-Type *** | | | |
| Crank V-pulley dia./<br>Fan V-pulley dia. | ϕ150/ ϕ150mm *** | | | | | | |

* *Engine specifications without radiator.*

** *Engine oil capacity for a "Deep Standard" oil pan. Refer to the operation manual provided by the driven machine manufacturer for the actual engine oil capacity of your machine.*

*** *May vary depending on application.*

# 4TNV106T (~ EPA Tier2)

| | | | | | |
|---|---|---|---|---|---|
| Engine Model | 4TNV106T | | | | |
| Version | CL | | | VM | |
| Type | Vertical In-line Diesel Engine | | | | |
| Combustion System | Direct Injection | | | | |
| Aspiration | Turbocharged | | | | |
| No. of Cylinders | 4 | | | | |
| Bore × Stroke | 106 × 125mm | | | | |
| Displacement | 4.412L | | | | |
| Continuous Rated Output | $min^{-1}$ | 1500 | 1800 | | |
| | kW | 51.5 | 61.8 | | |
| | PS | 70.0 | 84.0 | | |
| Max. Rated Output (Net) | $min^{-1}$ | 1500 | 1800 | 2000 | 2200 |
| | kW | 56.8 | 68.0 | 69.9 | 72.0 |
| | PS | 77.2 | 92.5 | 95.0 | 97.9 |
| High Idling | $min^{-1}$ | 1600 ± 25 | 1875 ± 25 | 2205 ± 25 | 2420 ± 25 |
| Engine Weight (Dry)<br>*with Flywheel Housing | 355 kg | | | 340 kg | |
| PTO Position | Flywheel End | | | | |
| Direction of Rotation | Counterclockwise Viewed From Flywheel End | | | | |
| Cooling System | Liquid-Cooled with Radiator | | | | |
| Lubricating System | Forced Lubrication with Trochoid Pump | | | | |
| Normal Oil Pressure at Rated Engine Speed | 0.31 - 0.49 MPa | | | With balancer: 0.34-0.44 MPa<br>Without balancer: 0.39-0.49 MPa | |
| Normal Oil Pressure at Low Idle Speed | 0.06 MPa | | | | |
| Starting System | Electric Starting (Starter Motor DC12V (3.0 kW)) *** | | | | |
| | Alternator: DC12V, 55A*** | | | | |
| | Recommended Battery Capacity: 12V, 88 Ah*** | | | | |
| Dimensions (L × W × H)* | 808 × 629 × 866 mm | | | 776 × 629 × 866 mm | |
| Engine Oil Pan Capacity** | 14.0/5.0L<br>(Dipstick Upper Limit / Lower Limit) | | | 14.0/6.5L<br>(Dipstick Upper Limit / Lower Limit) | |
| Engine Coolant Capacity | 6L Engine Only | | | | |
| Standard Cooling Fan | 500mm O.D. 7 Blade Pusher-Type *** | | | 500mm O.D.7 Blade Suction-Type*** | |
| Crank V-pulley dia./<br>Fan V-pulley dia. | ϕ150/ ϕ150mm *** | | | | |

* *Engine specifications without radiator.*

** *Engine oil capacity for a "Deep Standard" oil pan. Refer to the operation manual provided by the driven machine manufacturer for the actual engine oil capacity of your machine.*

*** *May vary depending on application.*

## 3TNV82A-B (complies with EPA Interim Tier4)

| | | | | | | | | | | | | | | |
|---|---|---|---|---|---|---|---|---|---|---|---|---|---|---|
| Engine Model | | 3TNV82A-B | | | | | | | | | | | | |
| Version | | CL | VM | | | | | | | | | | | |
| Type | | Vertical, 4-cycle water-cooled diesel engine | | | | | | | | | | | | |
| Combustion System | | Direct Injection | | | | | | | | | | | | |
| Aspiration | | Natural aspiration | | | | | | | | | | | | |
| No. of Cylinders | | 3 | | | | | | | | | | | | |
| Bore × Stroke | | ϕ82 × 84mm | | | | | | | | | | | | |
| Displacement | | 1.331L | | | | | | | | | | | | |
| Continuous Rated Output | $min^{-1}$ | | | | | | | | | | | | | |
| | kW | | | | | | | | | | | | | |
| | PS | | | | | | | | | | | | | |
| Max. Rated Output (Net) | $min^{-1}$ | | | | | 2200 | 2300 | 2400 | 2500 | 2600 | 2700 | 2800 | | 3000 |
| | kW | | | | | 16.0 | 16.8 | 17.5 | 18.2 | 19.0 | 19.7 | 20.4 | | 21.9 |
| | PS | | | | | 21.8 | 22.8 | 23.8 | 24.8 | 25.8 | 26.8 | 27.8 | | 29.8 |
| | | | | | | | | | | | | | | 23.0 |
| High Idling | $min^{-1}$ | | | | | 2375 ±25 | 2485 ±25 | 2570 ±25 | 2675 ±25 | 2780 ±25 | 2890 ±25 | 2995 ±25 | | 3180 ±25 |
| Engine Weight (dry) *with Flywheel Housing | | | 128kg | | | | | | | | | | | |
| PTO Position | | Flywheel End | | | | | | | | | | | | |
| Direction of Rotation | | Counterclockwise Viewed From Flywheel End | | | | | | | | | | | | |
| Governor | | Mechanical governor (All-speed governor) | | | | | | | | | | | | |
| Cooling System | | Liquid-Cooled with Radiator | | | | | | | | | | | | |
| Lubricating System | | Forced Lubrication with Trochoid Pump | | | | | | | | | | | | |
| Normal Oil Pressure | Rated Engine Speed | | 0.31-0.46 (3.2-4.7) MPa | | | | | | | | | | 0.36-0.51 (3.7-5.2) MPa | |
| | Low Idle Speed | ≥ 0.06 (≥ 0.6) MPa | | | | | | | | | | | | |
| Starting System | | Electric Starting (Starter Motor: DC12V (1.7kW)) *** | | | | | | | | | | | | |
| Charging system | | Alternator (DC12V/40A) *** | | | | | | | | | | | | |
| Recommended Battery Capacity | | 12V-55Ah*** (5h rating) | | | | | | | | | | | | |
| Starting aid device | | Super-quick Heating Glow plug | | | | | | | | | | | | |
| Dimensions (L × W × H)* | | | 546 × 492 × 561mm | | | | | | | | | | | |
| Engine Oil Pan Capacity** | | 5.5L/3.6L (Dipstick Upper Limit / Lower Limit) | | | | | | | | | | | | |
| Engine Coolant Capacity | | 1.8L Engine Only | | | | | | | | | | | | |
| Standard Cooling Fan | | Resin F type pusher fan - ϕ335(NF) x 6 | | | | | | | | | | | | |
| Crank V-pulley dia./ Fan V-pulley dia. | | | ϕ110/ ϕ110mm | | | | | | | | | | | |

* *Engine specifications without radiator.*

** *Engine oil capacity for a "Deep Standard" oil pan. Refer to the operation manual provided by the driven machine manufacturer for the actual engine oil capacity of your machine.*

*** *May vary depending on application.*

# 3TNV84T-B (complies with EPA Interim Tier4)

| | | | | | | | | | | | | | | |
|---|---|---|---|---|---|---|---|---|---|---|---|---|---|---|
| Engine Model | | 3TNV84T-B | | | | | | | | | | | | |
| Version | | CL | | VM | | | | | | | | | | |
| Type | | Vertical, 4-cycle water-cooled diesel engine | | | | | | | | | | | | |
| Combustion System | | Direct Injection | | | | | | | | | | | | |
| Aspiration | | Turbocharged | | | | | | | | | | | | |
| No. of Cylinders | | 3 | | | | | | | | | | | | |
| Bore × Stroke | | ϕ84 × 90mm | | | | | | | | | | | | |
| Displacement | | 1.496L | | | | | | | | | | | | |
| Continuous Rated Output | $min^{-1}$ | | | | | | | | | | | | | |
| | kW | | | | | | | | | | | | | |
| | PS | | | | | | | | | | | | | |
| Max. Rated Output (Net) | $min^{-1}$ | | | | | | | 2400 | 2500 | 2600 | 2700 | 2800 | | |
| | kW | | | | | | | 25.0 | 26.0 | 26.8 | 27.9 | 29.1 | | |
| | PS | | | | | | | 34.0 | 35.3 | 36.5 | 38.0 | 39.5 | | |
| High Idling | $min^{-1}$ | | | | | | | 2590 ±25 | 2700 ±25 | 2810 ±25 | 2920 ±25 | 2995 ±25 | | |
| Engine Weight (dry) *with Flywheel Housing | | | | 155kg | | | | | | | | | | |
| PTO Position | | Flywheel End | | | | | | | | | | | | |
| Direction of Rotation | | Counterclockwise Viewed From Flywheel End | | | | | | | | | | | | |
| Governor | | Electronic governor (All-speed governor) | | | | | | | | | | | | |
| Cooling System | | Liquid-Cooled with Radiator | | | | | | | | | | | | |
| Lubricating System | | Forced Lubrication with Trochoid Pump | | | | | | | | | | | | |
| Normal Oil Pressure | Rated Engine Speed | | | | | | | 0.34-0.49 (3.5-5.0) MPa | | | | 0.39-0.54 (4.0-5.5) MPa | | |
| | Low Idle Speed | ≥ 0.06 (≥ 0.6) MPa | | | | | | | | | | | | |
| Starting System | | Electric Starting (Starter Motor: DC12V (1.7kW)) *** | | | | | | | | | | | | |
| Charging system | | Alternator (DC12V/40A) *** | | | | | | | | | | | | |
| Recommended Battery Capacity | | 12V-55Ah*** (5h rating) | | | | | | | | | | | | |
| Starting aid device | | Air heater (12V DC 400W) | | | | | | | | | | | | |
| Dimensions (L × W × H)* | | 589 × 486 × 622mm | | 564 × 486 × 622mm | | | | | | | | | | |
| Engine Oil Pan Capacity** | | 6.7L/3.9L (Dipstick Upper Limit / Lower Limit) | | | | | | | | | | | | |
| Engine Coolant Capacity | | 2.0L Engine Only | | | | | | | | | | | | |
| Standard Cooling Fan | | | | Resin F type pusher fan - ϕ350(QF) x 6 | | | | | | | | | | |
| Crank V-pulley dia./ Fan V-pulley dia. | | | | ϕ110/ ϕ110mm | | | | | | | | | | |

* *Engine specifications without radiator.*

** *Engine oil capacity for a "Deep Standard" oil pan. Refer to the operation manual provided by the driven machine manufacturer for the actual engine oil capacity of your machine.*

*** *May vary depending on application.*

## 3TNV88-U (complies with EPA Interim Tier4)

| | | | | | | | | | | | | | | |
|---|---|---|---|---|---|---|---|---|---|---|---|---|---|---|
| Engine Model | | 3TNV88-U | | | | | | | | | | | | |
| Version | | CL | | VM | | | | | | | | | | |
| Type | | Vertical, 4-cycle water-cooled diesel engine | | | | | | | | | | | | |
| Combustion System | | Direct Injection | | | | | | | | | | | | |
| Aspiration | | Natural aspiration | | | | | | | | | | | | |
| No. of Cylinders | | 3 | | | | | | | | | | | | |
| Bore × Stroke | | ϕ88 × 90mm | | | | | | | | | | | | |
| Displacement | | 1.642L | | | | | | | | | | | | |
| Continuous Rated Output | $min^{-1}$ | | | | | | | | | | | | | |
| | kW | | | | | | | | | | | | | |
| | PS | | | | | | | | | | | | | |
| Max. Rated Output (Net) | $min^{-1}$ | | | | | 2200 | 2300 | 2400 | 2500 | 2600 | 2700 | 2800 | | 3000 |
| | kW | | | | | 18.1 | 18.9 | 19.7 | 20.5 | 21.3 | 22.2 | 23.0 | | 24.6 |
| | PS | | | | | 24.6 | 25.7 | 26.8 | 27.9 | 29.0 | 30.2 | 31.3 | | 33.5 |
| High Idling | $min^{-1}$ | | | | | 2400 ±25 | 2510 ±25 | 2590 ±25 | 2700 ±25 | 2810 ±25 | 2920 ±25 | 2995 ±25 | | 3210 ±25 |
| Engine Weight (dry) *with Flywheel Housing | | 155kg | | | | | | | | | | | | |
| PTO Position | | Flywheel End | | | | | | | | | | | | |
| Direction of Rotation | | Counterclockwise Viewed From Flywheel End | | | | | | | | | | | | |
| Governor | | Mechanical governor (All-speed governor) | | | | | | | | | | | | |
| Cooling System | | Liquid-Cooled with Radiator | | | | | | | | | | | | |
| Lubricating System | | Forced Lubrication with Trochoid Pump | | | | | | | | | | | | |
| Normal Oil Pressure | Rated Engine Speed | 0.34-0.49 (3.5-5.0) MPa | | | | | | | | | | | | 0.39-0.54 (4.0-5.5) MPa |
| | Low Idle Speed | ≥ 0.06 (≥ 0.6) MPa | | | | | | | | | | | | |
| Starting System | | Electric Starting (Starter Motor: DC12V (1.7kW)) *** | | | | | | | | | | | | |
| Charging system | | Alternator (DC12V/40A) *** | | | | | | | | | | | | |
| Recommended Battery Capacity | | 12V-55Ah*** (5h rating) | | | | | | | | | | | | |
| Starting aid device | | Super-quick Heating Glow plug | | | | | | | | | | | | |
| Dimensions (L × W × H)* | | 568 × 514 × 622mm | | | | | | | | | | | | |
| Engine Oil Pan Capacity** | | 6.7L/3.9L (Dipstick Upper Limit / Lower Limit) | | | | | | | | | | | | |
| Engine Coolant Capacity | | 2.0L Engine Only | | | | | | | | | | | | |
| Standard Cooling Fan | | Resin F type pusher fan - ϕ335(NF) x 6 | | | | | | | | | | | | |
| Crank V-pulley dia./ Fan V-pulley dia. | | ϕ110/ ϕ110mm | | | | | | | | | | | | |

* *Engine specifications without radiator.*

** *Engine oil capacity for a "Deep Standard" oil pan. Refer to the operation manual provided by the driven machine manufacturer for the actual engine oil capacity of your machine.*

*** *May vary depending on application.*

# 3TNV88-B (complies with EPA Interim Tier4)

| Engine Model | | 3TNV88-B | | | | | | | | | | | | |
|---|---|---|---|---|---|---|---|---|---|---|---|---|---|---|
| Version | | CL | VM | | | | | | | | | | | |
| Type | | Vertical, 4-cycle water-cooled diesel engine | | | | | | | | | | | | |
| Combustion System | | Direct Injection | | | | | | | | | | | | |
| Aspiration | | Natural aspiration | | | | | | | | | | | | |
| No. of Cylinders | | 3 | | | | | | | | | | | | |
| Bore × Stroke | | ϕ88 × 90mm | | | | | | | | | | | | |
| Displacement | | 1.642L | | | | | | | | | | | | |
| Continuous Rated Output | $min^{-1}$ | 1500 | 1800 | | | | | | | | | | | |
| | kW | 12.3 | 14.8 | | | | | | | | | | | |
| | PS | 16.7 | 20.1 | | | | | | | | | | | |
| Max. Rated Output (Net) | $min^{-1}$ | 1500 | 1800 | | | 2200 | 2300 | 2400 | 2500 | 2600 | 2700 | 2800 | | 3000 |
| | kW | 13.5 | 16.3 | | | 19.9 | 20.7 | 21.6 | 22.6 | 23.5 | 24.3 | 25.2 | | 27.1 |
| | PS | 18.4 | 22.1 | | | 27.0 | 28.2 | 29.4 | 30.7 | 31.9 | 33.1 | 34.2 | | 36.8 |
| High Idling | $min^{-1}$ | 1600 ±25 | 1895 ±25 | | | 2400 ±25 | 2510 ±25 | 2590 ±25 | 2700 ±25 | 2810 ±25 | 2920 ±25 | 2995 ±25 | | 3210 ±25 |
| Engine Weight (dry) *with Flywheel Housing | | 161kg | 155kg | | | | | | | | | | | |
| PTO Position | | Flywheel End | | | | | | | | | | | | |
| Direction of Rotation | | Counterclockwise Viewed From Flywheel End | | | | | | | | | | | | |
| Governor | | Mechanical governor (All-speed governor) | | | | | | | | | | | | |
| Cooling System | | Liquid-Cooled with Radiator | | | | | | | | | | | | |
| Lubricating System | | Forced Lubrication with Trochoid Pump | | | | | | | | | | | | |
| Normal Oil Pressure | Rated Engine Speed | 0.29-0.44 (3.0-4.5) MPa | 0.34-0.49 (3.5-5.0) MPa | | | | | | | | | | 0.39-0.54 (4.0-5.5) MPa | |
| | Low Idle Speed | ≥ 0.06 (≥ 0.6) MPa | | | | | | | | | | | | |
| Starting System | | Electric Starting (Starter Motor: DC12V (1.7kW)) *** | | | | | | | | | | | | |
| Charging system | | Alternator (DC12V/40A) *** | | | | | | | | | | | | |
| Recommended Battery Capacity | | 12V-55Ah*** (5h rating) | | | | | | | | | | | | |
| Starting aid device | | Super-quick Heating Glow plug | | | | | | | | | | | | |
| Dimensions (L × W × H)* | | 583 × 514 × 622mm | 568 × 514 × 622mm | | | | | | | | | | | |
| Engine Oil Pan Capacity** | | 6.7L/3.9L (Dipstick Upper Limit / Lower Limit) | | | | | | | | | | | | |
| Engine Coolant Capacity | | 2.0L Engine Only | | | | | | | | | | | | |
| Standard Cooling Fan | | Resin F type pusher fan - ϕ335(NF) x 6 | | | | | | | | | | | | |
| Crank V-pulley dia./ Fan V-pulley dia. | | ϕ120/ ϕ90mm | ϕ110/ ϕ110mm | | | | | | | | | | | |

* *Engine specifications without radiator.*

** *Engine oil capacity for a "Deep Standard" oil pan. Refer to the operation manual provided by the driven machine manufacturer for the actual engine oil capacity of your machine.*

*** *May vary depending on application.*

## 4TNV84T-Z (complies with EPA Interim Tier4)

| Engine Model | | 4TNV84T-Z | | | | | | | | | | | | |
|---|---|---|---|---|---|---|---|---|---|---|---|---|---|---|
| Version | | CL | VM | | | | | | | | | | | |
| Type | | Vertical, 4-cycle water-cooled diesel engine | | | | | | | | | | | | |
| Combustion System | | Direct Injection | | | | | | | | | | | | |
| Aspiration | | Turbocharged | | | | | | | | | | | | |
| No. of Cylinders | | 4 | | | | | | | | | | | | |
| Bore × Stroke | | ϕ84 × 90mm | | | | | | | | | | | | |
| Displacement | | 1.995L | | | | | | | | | | | | |
| Continuous Rated Output | $min^{-1}$ | 1500 | 1800 | | | | | | | | | | | |
| | kW | 19.1 | 24.3 | | | | | | | | | | | |
| | PS | 26.0 | 33.0 | | | | | | | | | | | |
| Max. Rated Output (Net) | $min^{-1}$ | 1500 | 1800 | | | | | 2400 | 2500 | | 2700 | 2800 | | 3000 |
| | kW | 21.3 | 26.9 | | | | | 33.5 | 34.5 | | 37.1 | 38.6 | | 41.2 |
| | PS | 29.0 | 36.5 | | | | | 45.5 | 47.0 | | 50.5 | 52.5 | | 56.0 |
| High Idling | $min^{-1}$ | 1600 ±25 | 1895 ±25 | | | | | 2590 ±25 | 2700 ±25 | | 2850 ±25 | 2950 ±25 | | 3150 ±25 |
| Engine Weight (dry) *with Flywheel Housing | | 183kg | 170kg | | | | | | | | | | | |
| PTO Position | | Flywheel End | | | | | | | | | | | | |
| Direction of Rotation | | Counterclockwise Viewed From Flywheel End | | | | | | | | | | | | |
| Governor | | Electronic governor (All-speed governor) | | | | | | | | | | | | |
| Cooling System | | Liquid-Cooled with Radiator | | | | | | | | | | | | |
| Lubricating System | | Forced Lubrication with Trochoid Pump | | | | | | | | | | | | |
| Normal Oil Pressure | Rated Engine Speed | 0.29-0.44 (3.0-4.5) MPa | 0.36-0.51 (3.7-5.2) MPa | | | | | | | | | | | |
| | Low Idle Speed | ≥ 0.06 (≥ 0.6) MPa | | | | | | | | | | | | |
| Starting System | | Electric Starting (Starter Motor: DC12V (1.7kW) *** | | | | | | | | | | | | |
| Charging system | | Alternator (DC12V/40A) *** | | | | | | | | | | | | |
| Recommended Battery Capacity | | 12V-64Ah*** (5h rating) | | | | | | | | | | | | |
| Starting aid device | | Air heater (12V DC 400W) | | | | | | | | | | | | |
| Dimensions (L × W × H)* | | 683 × 499 × 713mm | 649 × 499 × 713mm | | | | | | | | | | | |
| Engine Oil Pan Capacity** | | 7.4L/4.0L (Dipstick Upper Limit / Lower Limit) | | | | | | | | | | | | |
| Engine Coolant Capacity | | 2.7L Engine Only | | | | | | | | | | | | |
| Standard Cooling Fan | | Resin F type pusher fan - ϕ370(EF) x 6 | | | | | | | | | | | | |
| Crank V-pulley dia./ Fan V-pulley dia. | | ϕ120/ ϕ90mm | ϕ110/ ϕ110mm | | | | | | | | | | | |

* *Engine specifications without radiator.*

** *Engine oil capacity for a "Deep Standard" oil pan. Refer to the operation manual provided by the driven machine manufacturer for the actual engine oil capacity of your machine.*

*** *May vary depending on application.*

# 4TNV88-U (complies with EPA Interim Tier4)

| | | | | | | | | | | | | | | |
|---|---|---|---|---|---|---|---|---|---|---|---|---|---|---|
| Engine Model | | 4TNV88-U | | | | | | | | | | | | |
| Version | | CL | VM | | | | | | | | | | | |
| Type | | Vertical, 4-cycle water-cooled diesel engine | | | | | | | | | | | | |
| Combustion System | | Direct Injection | | | | | | | | | | | | |
| Aspiration | | Natural aspiration | | | | | | | | | | | | |
| No. of Cylinders | | 4 | | | | | | | | | | | | |
| Bore × Stroke | | ϕ88 × 90mm | | | | | | | | | | | | |
| Displacement | | 2.190L | | | | | | | | | | | | |
| Continuous Rated Output | $min^{-1}$ | | | | | | | | | | | | | |
| | kW | | | | | | | | | | | | | |
| | PS | | | | | | | | | | | | | |
| Max. Rated Output (Net) | $min^{-1}$ | | | | | | | | | | 2700 | 2800 | | |
| | kW | | | | | | | | | | 29.6 | 30.7 | | |
| | PS | | | | | | | | | | (40.2) | (41.7) | | |
| High Idling | $min^{-1}$ | | | | | | | | | | 2920 ±25 | 2995 ±25 | | |
| Engine Weight (dry) *with Flywheel Housing | | 170kg | | | | | | | | | | | | |
| PTO Position | | Flywheel End | | | | | | | | | | | | |
| Direction of Rotation | | Counterclockwise Viewed From Flywheel End | | | | | | | | | | | | |
| Governor | | Mechanical governor (All-speed governor) | | | | | | | | | | | | |
| Cooling System | | Liquid-Cooled with Radiator | | | | | | | | | | | | |
| Lubricating System | | Forced Lubrication with Trochoid Pump | | | | | | | | | | | | |
| Normal Oil Pressure | Rated Engine Speed | 0.32-0.47 (3.3-4.8) MPa | | | | | | | | | | | | |
| | Low Idle Speed | ≥ 0.06 (≥ 0.6) MPa | | | | | | | | | | | | |
| Starting System | | Electric Starting (Starter Motor: DC12V (1.7kW)) *** | | | | | | | | | | | | |
| Charging system | | Alternator (DC12V/40A) *** | | | | | | | | | | | | |
| Recommended Battery Capacity | | 12V-64Ah*** (5h rating) | | | | | | | | | | | | |
| Starting aid device | | Super-quick Heating Glow plug | | | | | | | | | | | | |
| Dimensions (L × W × H)* | | 684 × 523 × 617 | 659 × 523 × 617 | | | | | | | | | | | |
| Engine Oil Pan Capacity** | | 7.4L/4.0L (Dipstick Upper Limit / Lower Limit) | | | | | | | | | | | | |
| Engine Coolant Capacity | | 2.7L Engine Only | | | | | | | | | | | | |
| Standard Cooling Fan | | Resin F type pusher fan - ϕ370(EF) x 6 | | | | | | | | | | | | |
| Crank V-pulley dia./ Fan V-pulley dia. | | ϕ120/ ϕ90mm | ϕ110/ ϕ110mm | | | | | | | | | | | |

* *Engine specifications without radiator.*

** *Engine oil capacity for a "Deep Standard" oil pan. Refer to the operation manual provided by the driven machine manufacturer for the actual engine oil capacity of your machine.*

*** *May vary depending on application.*

## 4TNV88-B (complies with EPA Interim Tier4)

| Engine Model | | 4TNV88-B | | | | | | | | | | | |
|---|---|---|---|---|---|---|---|---|---|---|---|---|---|
| Version | | CL | VM | | | | | | | | | | |
| Type | | Vertical, 4-cycle water-cooled diesel engine | | | | | | | | | | | |
| Combustion System | | Direct Injection | | | | | | | | | | | |
| Aspiration | | Natural aspiration | | | | | | | | | | | |
| No. of Cylinders | | 4 | | | | | | | | | | | |
| Bore × Stroke | | ϕ88 × 90mm | | | | | | | | | | | |
| Displacement | | 2.190L | | | | | | | | | | | |
| Continuous Rated Output | $min^{-1}$ | 1500 | 1800 | | | | | | | | | | |
| | kW | 16.4 | 19.6 | | | | | | | | | | |
| | PS | 22.3 | 26.7 | | | | | | | | | | |
| Max. Rated Output (Net) | $min^{-1}$ | 1500 | 1800 | 2000 | 2100 | 2200 | 2300 | 2400 | 2500 | 2600 | 2700 | 2800 | 3000 |
| | kW | 18.0 | 21.6 | 24.1 | 25.3 | 26.5 | 27.7 | 28.8 | 30.1 | 31.3 | 32.5 | 33.7 | 35.4 |
| | PS | 24.5 | 29.4 | 32.7 | 34.4 | 36.0 | 37.6 | 39.2 | 40.9 | 42.5 | 44.2 | 45.8 | 48.1 |
| High Idling | $min^{-1}$ | 1600 ±25 | 1895 ±25 | 2180 ±25 | 2290 ±25 | 2400 ±25 | 2510 ±25 | 2590 ±25 | 2700 ±25 | 2810 ±25 | 2920 ±25 | 2995 ±25 | 3210 ±25 |
| Engine Weight (dry) *with Flywheel Housing | | 183kg | 170kg | | | | | | | | | | |
| PTO Position | | Flywheel End | | | | | | | | | | | |
| Direction of Rotation | | Counterclockwise Viewed From Flywheel End | | | | | | | | | | | |
| Governor | | Mechanical governor (All-speed governor) | | | | | | | | | | | |
| Cooling System | | Liquid-Cooled with Radiator | | | | | | | | | | | |
| Lubricating System | | Forced Lubrication with Trochoid Pump | | | | | | | | | | | |
| Normal Oil Pressure | Rated Engine Speed | 0.29-0.44 (3.0-4.5) MPa | 0.32-0.47 (3.3-4.8) MPa | | | | | | | | | | |
| | Low Idle Speed | ≥ 0.06 (≥ 0.6) MPa | | | | | | | | | | | |
| Starting System | | Electric Starting (Starter Motor: DC12V (1.7kW)) *** | | | | | | | | | | | |
| Charging system | | Alternator (DC12V/40A) *** | | | | | | | | | | | |
| Recommended Battery Capacity | | 12V-64Ah*** (5h rating) | | | | | | | | | | | |
| Starting aid device | | Super-quick Heating Glow plug | | | | | | | | | | | |
| Dimensions (L × W × H)* | | 684 × 523 × 617 | 659 × 523 × 617 | | | | | | | | | | |
| Engine Oil Pan Capacity** | | 7.4L/4.0L (Dipstick Upper Limit / Lower Limit) | | | | | | | | | | | |
| Engine Coolant Capacity | | 2.7L Engine Only | | | | | | | | | | | |
| Standard Cooling Fan | | Resin F type pusher fan - ϕ370(EF) x 6 | | | | | | | | | | | |
| Crank V-pulley dia./ Fan V-pulley dia. | | ϕ120/ ϕ90 | ϕ110/ ϕ110 | | | | | | | | | | |

* *Engine specifications without radiator.*

** *Engine oil capacity for a "Deep Standard" oil pan. Refer to the operation manual provided by the driven machine manufacturer for the actual engine oil capacity of your machine.*

*** *May vary depending on application.*

# 4TNV98-E (complies with EPA Interim Tier4)

| | | | | | | | | | |
|---|---|---|---|---|---|---|---|---|---|
| Engine Model | | 4TNV98-E | | | | | | | |
| Version | | CL | | VM | | | | | |
| Type | | Vertical, 4-cycle water-cooled diesel engine | | | | | | | |
| Combustion System | | Direct Injection | | | | | | | |
| Aspiration | | Natural aspiration | | | | | | | |
| No. of Cylinders | | 4 | | | | | | | |
| Bore × Stroke | | 98 × 110mm | | | | | | | |
| Displacement | | 3.319L | | | | | | | |
| Continuous Rated Output | $min^{-1}$ | | | | | | | | |
| | kW | | | | | | | | |
| | PS | | | | | | | | |
| Max. Rated Output (Net) | $min^{-1}$ | | | | 2100 | 2200 | 2300 | 2400 | 2500 |
| | kW | | | | 36.8 | 38.2 | 39.7 | 41.6 | 43.0 |
| | PS | | | | 50.0 | 52.0 | 54.0 | 56.5 | 58.5 |
| High Idling | $min^{-1}$ | | | | 2250 ± 25 | 2350 ± 25 | 2450 ± 25 | 2550 ± 25 | 2650 ± 25 |
| Engine Weight (dry) *with Flywheel Housing | | | | 240kg | | | | | |
| PTO Position | | Flywheel End | | | | | | | |
| Direction of Rotation | | Counterclockwise Viewed From Flywheel End | | | | | | | |
| Governor | | Electronic governor (All-speed governor) | | | | | | | |
| Cooling System | | Liquid-Cooled with Radiator | | | | | | | |
| Lubricating System | | Forced Lubrication with Trochoid Pump | | | | | | | |
| Normal Oil Pressure | Rated Engine Speed | 0.29-0.39 (3.0-4.0) MPa | | | | | | | |
| | Low Idle Speed | 0.06 (0.6) MPa | | | | | | | |
| Starting System | | Electric Starting (Starter Motor: DC12V (2.3kW)) *** | | | | | | | |
| Charging system | | Alternator (DC12V/40A) *** | | | | | | | |
| Recommended Battery Capacity | | 12V-64Ah*** (5h rating) | | | | | | | |
| Starting aid device | | Air heater (12VDC/500W) | | | | | | | |
| Dimensions (L × W × H)* | | 719 × 540 × 721mm | | | | | | | |
| Engine Oil Pan Capacity** | | 10.2L/5.7L (Dipstick Upper Limit / Lower Limit) | | | | | | | |
| Engine Coolant Capacity | | 4.2L Engine Only | | | | | | | |
| Standard Cooling Fan | | Resin F type pusher fan - ϕ410(Al) x 6 | | | | | | | |
| Crank V-pulley dia./ Fan V-pulley dia. | | ϕ130/ ϕ130mm | | | | | | | |

* *Engine specifications without radiator.*

** *Engine oil capacity for a "Deep Standard" oil pan. Refer to the operation manual provided by the driven machine manufacturer for the actual engine oil capacity of your machine.*

*** *May vary depending on application.*

## 4TNV98-Z (complies with EPA Interim Tier4)

| Engine Model | | 4TNV98-Z | | | | | | | |
|---|---|---|---|---|---|---|---|---|---|
| Version | | CL | | VM | | | | | |
| Type | | Vertical, 4-cycle water-cooled diesel engine | | | | | | | |
| Combustion System | | Direct Injection | | | | | | | |
| Aspiration | | Natural aspiration | | | | | | | |
| No. of Cylinders | | 4 | | | | | | | |
| Bore × Stroke | | 98 × 110mm | | | | | | | |
| Displacement | | 3.319L | | | | | | | |
| Continuous Rated Output | $min^{-1}$ | 1500 | 1800 | | | | | | |
| | kW | 30.9 | 36.8 | | | | | | |
| | PS | 42.0 | 50.0 | | | | | | |
| Max. Rated Output (Net) | $min^{-1}$ | 1500 | 1800 | 2000 | 2100 | 2200 | 2300 | 2400 | 2500 |
| | kW | 34.6 | 41.2 | 41.9 | 43.8 | 45.6 | 47.4 | 49.3 | 51.1 |
| | PS | 47.0 | 56.0 | 57.0 | 59.5 | 62.0 | 64.5 | 67.0 | 69.5 |
| High Idling | $min^{-1}$ | 1530 ± 25 | 1830 ± 25 | 2150 ± 25 | 2250 ± 25 | 2350 ± 25 | 2450 ± 25 | 2550 ± 25 | 2650 ± 25 |
| Engine Weight (dry) *with Flywheel Housing | | 248kg | | 235kg | | | | | |
| PTO Position | | Flywheel End | | | | | | | |
| Direction of Rotation | | Counterclockwise Viewed From Flywheel End | | | | | | | |
| Governor | | Electronic governor (All-speed governor) | | | | | | | |
| Cooling System | | Liquid-Cooled with Radiator | | | | | | | |
| Lubricating System | | Forced Lubrication with Trochoid Pump | | | | | | | |
| Normal Oil Pressure | Rated Engine Speed | 0.29-0.39 (3.0-4.0) MPa | | | | | | | |
| | Low Idle Speed | 0.06 (0.6) MPa | | | | | | | |
| Starting System | | Electric Starting (Starter Motor: DC12V (2.3kW)) *** | | | | | | | |
| Charging system | | Alternator (DC12V/40A) *** | | | | | | | |
| Recommended Battery Capacity | | 12V-64Ah*** (5h rating) | | | | | | | |
| Starting aid device | | Air heater (12VDC/500W) | | | | | | | |
| Dimensions (L × W × H)* | | 719 × 540 × 721mm | | | | | | | |
| Engine Oil Pan Capacity** | | 10.2L/5.7L (Dipstick Upper Limit / Lower Limit) | | | | | | | |
| Engine Coolant Capacity | | 4.2L Engine Only | | | | | | | |
| Standard Cooling Fan | | Resin F type pusher fan - ϕ410(Al) x 6 | | | | | | | |
| Crank V-pulley dia./ Fan V-pulley dia. | | ϕ130/ ϕ130mm | | | | | | | |

* *Engine specifications without radiator.*

** *Engine oil capacity for a "Deep Standard" oil pan. Refer to the operation manual provided by the driven machine manufacturer for the actual engine oil capacity of your machine.*

*** *May vary depending on application.*

# 4TNV98T-Z (complies with EPA Interim Tier4)

| | | | | | | | | | |
|---|---|---|---|---|---|---|---|---|---|
| Engine Model | | 4TNV98T-Z | | | | | | | |
| Version | | CL | | VM | | | | | |
| Type | | Vertical, 4-cycle water-cooled diesel engine | | | | | | | |
| Combustion System | | Direct Injection | | | | | | | |
| Aspiration | | Turbocharged | | | | | | | |
| No. of Cylinders | | 4 | | | | | | | |
| Bore × Stroke | | 98 × 110mm | | | | | | | |
| Displacement | | 3.319L | | | | | | | |
| Continuous Rated Output | $min^{-1}$ | 1500 | 1800 | | | | | | |
| | kW | 37.9 | 45.6 | | | | | | |
| | PS | 51.5 | 62.0 | | | | | | |
| Max. Rated Output (Net) | $min^{-1}$ | 1500 | 1800 | | | 2200 | 2300 | 2400 | 2500 |
| | kW | 41.9 | 50.4 | | | 55.5 | 58.0 | 60.3 | 62.5 |
| | PS | 57.0 | 68.5 | | | 75.5 | 78.8 | 82.0 | 85.0 |
| High Idling | $min^{-1}$ | 1530 ± 25 | 1830 ± 25 | | | 2350 ± 25 | 2450 ± 25 | 2550 ± 25 | 2650 ± 25 |
| Engine Weight (dry) *with Flywheel Housing | | 258kg | | 245kg | | | | | |
| PTO Position | | Flywheel End | | | | | | | |
| Direction of Rotation | | Counterclockwise Viewed From Flywheel End | | | | | | | |
| Governor | | Electronic governor (All-speed governor) | | | | | | | |
| Cooling System | | Liquid-Cooled with Radiator | | | | | | | |
| Lubricating System | | Forced Lubrication with Trochoid Pump | | | | | | | |
| Normal Oil Pressure | Rated Engine Speed | 0.29-0.39 (3.0-4.0) MPa | | | | | | | |
| | Low Idle Speed | ≥ 0.06 (≥ 0.6) MPa | | | | | | | |
| Starting System | | Electric Starting (Starter Motor: DC12V (2.3kW)) *** | | | | | | | |
| Charging system | | Alternator (DC12V/40A) *** | | | | | | | |
| Recommended Battery Capacity | | 12V-64Ah*** (5h rating) | | | | | | | |
| Starting aid device | | Air heater (12VDC/500W) | | | | | | | |
| Engine Oil Pan Capacity** | | 10.2L/5.7L (Dipstick Upper Limit / Lower Limit) | | | | | | | |
| Engine Coolant Capacity | | 4.2L Engine Only | | | | | | | |
| Standard Cooling Fan | | Resin F type pusher fan - ϕ430(UX) x 6 | | | | | | | |
| Crank V-pulley dia./ Fan V-pulley dia. | | ϕ130/ ϕ130mm | | | | | | | |

* *Engine specifications without radiator.*

** *Engine oil capacity for a "Deep Standard" oil pan. Refer to the operation manual provided by the driven machine manufacturer for the actual engine oil capacity of your machine.*

*** *May vary depending on application.*

This Page Intentionally Left Blank

YANMAR


## Head Office:
## Yanmar Co., Ltd.
1-32 Chayamachi, Kita-ku, Osaka 530-8311, Japan
http://www.yanmar.co.jp

---

## Yanmar America Corporation
951 Corporate Grove Drive
Buffalo Grove, IL 60089-4508, U.S.A.
TEL: 1-847-541-1900 FAX: 1-847-541-2161
http://www.yanmar.com

## Yanmar Europe B.V.
Brugplein11, 1332 BS Almere -de Vaart,
The Netherlands.
TEL: 31-36-5493200 FAX: 31-36-5493209
http://www.yanmar.nl

## Yanmar Asia (Singapore) Corporation Pte. Ltd.
4 Tuas Lane, Singapore 638613
TEL: 65-68615077 FAX: 65-68611509
http://www.yanmar.co.jp/yasc/

0ATNV-U00101
PRINTED IN JAPAN

YANMAR CO.,LTD.